FM 3-94

THEATER ARMY, CORPS, AND DIVISION OPERATIONS

APRIL 2014

DISTRIBUTION RESTRICTION:

Approved for public release; distribution is unlimited.

HEADQUARTERS, DEPARTMENT OF THE ARMY

This publication is available at
Army Knowledge Online
(https://armypubs.us.army.mil/doctrine/index.html).
To receive publishing updates, please subscribe at
http://www.apd.army.mil/AdminPubs/new_subscribe.asp.

Field Manual
No. 3-94

Headquarters
Department of the Army
Washington, DC, 21 April 2014

Theater Army, Corps, and Division Operations

Contents

Page

PREFACE ..... **v**

INTRODUCTION ..... **vii**

PART ONE LANDPOWER TAILORED FOR THE JOINT FORCE

Chapter 1 ECHELONS ABOVE BRIGADE **1-1**
A Modular, Tailorable Army 1-1
Combatant Command Through Tactical Headquarters 1-4
Operational and Administrative Chains of Command 1-14
Army Service Component Command 1-18
ARFOR 1-19
Army Logistics and Medical Support 1-22
Overlapping Operational and Administrative Chains 1-24
Operational Areas 1-27

Chapter 2 THE THEATER ARMY **2-1**
Army Service Component Command 2-1
Unified Action in the Geographic Combatant Command 2-3
The Theater Army and Campaigns 2-5
Defense Support of Civil Authorities 2-15
Theater Army Headquarters 2-15

Chapter 3 THEATER-LEVEL COMMANDS AND UNITS **3-1**
Assigned and Aligned Theater Forces 3-1
Other Theater-Level Army Forces 3-8

PART TWO THE ARMY CORPS

Chapter 4 CORPS ROLES AND ORGANIZATION **4-1**
Roles of the Corps 4-1
Subordinate Forces 4-9
The Corps Headquarters 4-12

Distribution Restriction: Approved for public release; distribution is unlimited.

***This manual supersedes FM 3-92 (dated 26 November 2010) and FM 3-93 (dated 12 October 2011).**

Chapter 5 CORPS OPERATIONS 5-1
Operations at the Corps Level 5-1
Deployment of a Corps 5-2
Task-Organizing the Corps 5-3
The Corps Area of Operations 5-9
The Corps and Joint Forces 5-11
Decisive Action 5-19
Operational Framework 5-27
The Corps and Forcible Entry Operations 5-29

PART THREE THE ARMY DIVISION

Chapter 6 DIVISION ROLES AND ORGANIZATION 6-1
Roles of the Division 6-1
Subordinate Forces 6-3
The Division Headquarters 6-13

Chapter 7 DIVISION OPERATIONS 7-1
The Tactical Environment 7-1
Deployment of a Division 7-2
Task-Organizing the Division 7-2
The Division Area of Operations 7-6
Air Force Support 7-8
Marine Corps Units 7-10
Decisive Action 7-11
Operational Framework 7-16

GLOSSARY Glossary-1

REFERENCES References-1

INDEX Index-1

Figures

Figure 1-1. The range of military operations 1-4
Figure 1-2. Functional and integrating cells 1-8
Figure 1-3. Planning horizons for integrating cells 1-10
Figure 1-4. Distribution of staff sections within a main command post 1-12
Figure 1-5. Example of echelons above brigade command post 1-13
Figure 1-6. The operational chain of command and administrative control 1-15
Figure 1-7. Possible joint task force components 1-20
Figure 1-8. Overlapping chains of authority 1-25
Figure 1-9. Joint task force organized by Service and functional components 1-26
Figure 1-10. The area of responsibility and joint operations areas 1-27
Figure 2-1. Service-specific responsibilities 2-2
Figure 2-2. Theater army's role in requesting regionally aligned forces 2-5
Figure 2-3. Joint phases and the theater army 2-6

Figure 2-4. An overview of force tailoring 2-11
Figure 2-5. Theater army as a multinational force land component in a theater of war 2-14
Figure 2-6. Theater army main command post organization 2-16
Figure 2-7. Theater army contingency command post organization 2-18
Figure 2-8. Theater army headquarters and headquarters battalion organization 2-20
Figure 3-1. Example of theater commands and brigades 3-1
Figure 3-2. Example of theater sustainment command 3-2
Figure 3-3. Modular medical support for the Army 3-6
Figure 3-4. CBRNE operational headquarters 3-10
Figure 3-5. Example of mature theater 3-14
Figure 4-1. Example of joint task force staff 4-6
Figure 4-2. The corps as a tactical headquarters 4-8
Figure 4-3. An example of headquarters and units task-organized under the corps 4-10
Figure 4-4. Modular brigades and groups 4-11
Figure 4-5. The corps main command post 4-13
Figure 4-6. Example of corps tactical command post 4-14
Figure 4-7. The headquarters and headquarters battalion of the corps 4-16
Figure 5-1. Possible configurations for the corps area of operations 5-10
Figure 5-2. Air and missile defense 5-17
Figure 5-3. Example of corps movement to contact 5-22
Figure 5-4. Example of corps attack 5-23
Figure 5-5. Example of corps defense 5-25
Figure 6-1. Three types of brigade combat teams (current organization) 6-4
Figure 6-2. Example of a reorganized armored brigade combat team 6-5
Figure 6-3. Field artillery brigade 6-6
Figure 6-4. Combat aviation brigade 6-7
Figure 6-5. Battlefield surveillance brigade 6-8
Figure 6-6. Maneuver enhancement brigade 6-9
Figure 6-7. Sustainment brigade 6-10
Figure 6-8. Main command post of a division 6-14
Figure 6-9. Division tactical command post 6-16
Figure 6-10. Division headquarters and headquarters battalion 6-19
Figure 7-1. An example of a task-organized division 7-6
Figure 7-2. Example of division using contiguous and noncontiguous areas of operations 7-7
Figure 7-3. Division contiguous and noncontiguous area of operations 7-9
Figure 7-4. Example of division movement to contact 7-12

Tables

Table 1-1. The Army's structure 1-2
Table 1-2. Combatant commands and their ASCCs 1-5
Table 1-3. Joint command relationships 1-16
Table 5-1. Command and support relationships for the corps 5-6
Table 7-1. Command and support relationships for the division 7-4

Preface

FM 3-94 provides Army doctrine for the theater army, corps, and division. FM 3-94 explains the organization of the theater army, corps, and division headquarters and their respective command posts. It establishes the roles for each headquarters, including their respective contributions to joint operations. It discusses subordinate units and each headquarters' organization of its units, establishment of command and support relationships, and conduct of operations.

The principal audience for FM 3-94 is theater army, corps, and division commanders and staffs. It also provides relevant information regarding the organization and operations for commanders and staffs at field army, subordinate theater-level commands and brigades, geographic combatant commands, and other Service headquarters.

Commanders, staffs, and subordinates ensure their decisions and actions comply with applicable United States, international, and in some cases host-nation laws and regulations. Commanders at all levels ensure their Soldiers operate in accordance with the law of war and the rules of engagement. (See FM 27-10.)

FM 3-94 implements STANAG 2014, *Format for Orders and Designation of Timings, Locations and Boundaries*; STANAG 2019*, NATO Joint Military Symbology*; STANAG 2248, *Glossary of Land Military Terms and Definitions*; STANAG 2281, *Coalition Operations Handbook*; and AAP-06, *NATO Glossary of Terms and Definitions*.

FM 3-94 uses joint terms where applicable. Selected joint and Army terms and definitions appear in both the glossary and the text. The term for which FM 3-94 is proponent is marked with an asterisk in the glossary. Its definition is boldfaced in the text. For other terms and definitions shown in the text, the term is italicized and the number of the proponent publication follows the definition.

FM 3-94 applies to the Active Army, Army National Guard/Army National Guard of the United States, and United States Army Reserve unless otherwise stated.

The proponent of FM 3-94 is the United States Army Combined Arms Center. The preparing agency is the Combined Arms Doctrine Directorate, United States Army Combined Arms Center. Send comments and recommendations on a DA Form 2028 (*Recommended Changes to Publications and Blank Forms*) to Commander, United States Army Combined Arms Center and Fort Leavenworth, ATTN: ATZL-MCD (FM 3-94), 300 McPherson Avenue, Fort Leavenworth, KS 66027-2337; by e-mail to usarmy.leavenworth.mccoe.mbx.cadd-org-mailbox@mail.mil; or submit an electronic DA Form 2028.

This page intentionally left blank.

Introduction

The Army gives the combatant commander depth and versatility because landpower expands the friendly range of military options. The Army, uniquely, provides a combination of armored, medium, light, and airborne forces. Along with a full suite of enablers, this allows us to provide tailorable and scalable force packages for various contingencies. By multiplying the range of U.S. capabilities that the adversary must counter, the Army narrows options that might otherwise work against a lesser opponent or a coalition partner supported only by U.S. air and maritime power.

ADP 1

The unique and crucial role of the Army is to provide landpower to the geographic combatant commanders. Landpower, as ADP 1 notes, is "is the ubiquitous tool of the joint force—often decisive, sometimes indirect, but indispensable." FM 3-94 examines the employment of Army forces within a geographic combatant command. It describes how the Army supports the combatant commander across the range of military operations in that area of responsibility (AOR).

"The land domain is the most complex of the domains, because it addresses humanity—its cultures, ethnicities, religions, and politics" (ADP 1). The operational variables—political, military, economic, social, information, infrastructure, physical environment, and time (known as PMESII-PT)—affect operations within the land domain far more than in any other domain. The individual variables and their effect on an operational environment also differ dramatically for each campaign. Conditions affected by military operations, directly or indirectly, defy easy analysis. Thus, Army headquarters operating at echelons above brigade constantly adapt their organization and planning to the conditions in that joint operations area.

In addition to being the largest of the Armed Forces of the United States, the Army has a greater variety of units than the other Services, each with a different organization and purpose. Therefore, the Army provides the combatant commander with an interlocking array of higher headquarters trained and equipped to apply landpower from the theater level, through the operational level, and down to the tactical employment of various brigades, groups, and battalions. Together the theater army, corps, and division give the combatant commander several options necessary for the employment of landpower in an interdependent joint force.

The combatant commander has ever-changing needs for landpower to prevent, shape, and win across the AOR. Prevention requires flexible and credible United States (U.S.) military power to dissuade potential adversaries from threatening vital American security interests. The theater army integrates landpower with other deterrent capabilities. The corps represents an operationally significant Army force capable of altering the land balance of forces in each geographic combatant command. The division is the tactical hammer, translating operational-level plans into offensive, defensive, and stability tasks on the ground. Partner nations under an external threat understand that introducing U.S. landpower alters the regional military balance and bolsters their resolve to resist aggression.

All nations have land security elements, even if lacking credible air and naval forces. Army forces deploy around the world to train with security forces of other nations. This diminishes regional tensions and is vital to American security interests. Each geographic combatant commander develops programs to improve regional stability and promote peace through security cooperation. Shaping with military assets to improve security cannot prevent conflict, but it nudges global regions away from military confrontation and increases the effects of diplomatic, informational, and economic instruments of national power. Shaping the strategic security environment improves the chance for peace around the world. This is a critical task assigned to the theater army.

When war occurs, joint force commanders require Army units that can defeat the enemy and dominate land portions of the joint operations area. Land combat remains chaotic, lethal, and intensely human. Technology is important, but the outcome depends upon the skill and resolve of Soldiers, Marines, and

multinational ground forces. The ability to prevail in ground combat is often the decisive factor in breaking the enemy's will. History reflects that an enemy may cede the air and maritime domains to U.S. forces, while placing his faith in close combat. Winning in this environment requires the theater army to set the theater and assist Army forces into the fight. It requires the corps to integrate landpower throughout each phase of a campaign. Divisions outmaneuver the enemy, destroy enemy ground forces, seize and exploit operationally significant objectives, and match decisive action to ground conditions.

The theater army commander sets conditions for effective use of landpower. While commanding Army forces supporting AOR-wide engagement, the theater army commander matches Army capabilities to joint requirements, oversees the arrival of Army forces in the theater, and ensures that Soldiers across the AOR receive the support they require for as long as they are in the AOR. The corps is the principal headquarters for applying landpower as a component of a campaign. The corps commander translates campaign objectives into broad missions for ground forces and sets the conditions for the tactical use of Army and multinational ground forces to accomplish those missions. The corps commander coordinates land forces with air maritime and special operations forces to dominate land portions of joint operations areas. The division controls ground forces, synchronizing Army and joint combat power according to the conditions on the ground.

Each echelon above brigade headquarters has considerable flexibility built into its structure. Each can fulfill multiple roles depending upon the combatant commander's requirements and appropriate joint augmentation. This ranges from serving as the joint task force headquarters, as a joint and multinational force land component, down through the tactical employment of brigades and battalions. The theater army tailors each echelon, including itself, for its role in the campaign. Each headquarters varies its internal organization to accomplish the mission. Each echelon adjusts the distribution of subordinate units between headquarters—task organization—to the particular requirements of that phase or mission.

Operational and administrative responsibilities vary between echelons. Operational responsibilities include command of forces, direction of operations in time and space, and control of assigned areas of operations. The administrative responsibilities encompass the Service-specific requirements for equipping, sustainment, training, unit readiness, discipline, and personnel matters. The Army also has specified Service responsibilities to the joint force including certain logistics support and specialized support such as chemical, biological, radiological, and nuclear defense. The theater army, as the Army Service component command for that geographic combatant command, determines the most effective and efficient distribution of Service responsibilities. Depending upon the joint structure, the corps or division assumes Army component responsibilities within that joint force.

FM 3-94 has seven chapters organized under three parts.

Part One describes the Army hierarchy within a geographic combatant command and goes into detail about the theater army, the senior echelon in each geographic combatant command. It includes three chapters. Chapter 1 provides an overview of the higher echelons of the Army. It introduces the three senior echelons of the Army within a geographic combatant command. It describes their roles and tasks in general terms. It lays out the Army concept of sustainment and support provided by theater army. This chapter also discusses operational and administrative chains of command and their differences. The chapter concludes with a brief review of operational areas. Chapter 2 describes the roles and tasks of the theater army. It discusses the staff organization of the theater army. It also discusses the main command post and contingency command post of the theater army and their employment by the theater army commander. Chapter 3 summarizes the theater-level commands and supporting organizations that allow the theater army to fulfill its roles and enable the corps and division to accomplish theirs.

Part Two discusses the corps and includes two chapters. Chapter 4 explains the roles and tasks of the corps, together with its operational and administrative responsibilities. The chapter summarizes the subordinate units typically found in the corps echelon. The chapter then discusses the internal organization of the corps and the various command posts available to the corps commander. Chapter 5 examines corps-level operations. This includes how the corps arranges its combat power, organizes the area of operations, and conducts decisive action.

Part Three addresses the division in two chapters. Chapter 6 explains the roles and tasks of the division headquarters, together with its operational and administrative responsibilities. The chapter summarizes the

subordinate units normally under the operational or tactical control of the division. The chapter then discusses the internal organization of the division headquarters and the various command posts available to the division commander. Chapter 7 examines division-level operations. This includes how the division arranges its combat power, organizes the area of operations, and conducts decisive action.

More details on each echelon will be published in three supporting Army techniques publications (ATPs). One will cover the theater army in detail. Another will provide details and vignettes on the corps and corps operations. It will also describe how the corps headquarters transforms into a joint task force (JTF) for contingencies. A third will address the division, with an extensive discussion on decisive action at the tactical level.

This book is proponent for a single term, ARFOR. FM 3-94 modifies the definition of ARFOR. FM 3-94 is not the proponent for any new Army terms. It does not rescind any defined terms.

This page intentionally left blank.

PART ONE

Landpower Tailored for the Joint Force

The Army provides landpower to an interdependent joint force. Landpower is tailored for any combination of offensive, defensive, and stability or defense support of civil authorities tasks. Brigades are the principal tactical units for conducting operations. The exercise of mission command above the brigade level requires theater army, corps, and division headquarters. They may be tailored as functional land components with command of joint and multinational units. They will serve as Service components as organized or required. When the combatant commander so determines, they will become joint task force headquarters. The mix of echelons is not a rigid hierarchy and does not require a standard array of forces. Each headquarters provides a menu of capabilities to best match the combatant commander's requirements.

Chapter 1

Echelons Above Brigade

A MODULAR, TAILORABLE ARMY

1-1. In 2003, the Army undertook a fundamental shift from a division-based force toward a brigade-based force. The highly integrated organization of the Army's divisions in the late 1990s made it difficult to deploy divisional units apart from their divisional base and keep the rest of the division ready for other missions. The Army needed to reorganize around smaller, more versatile formations able to deploy more promptly and sustain the fight indefinitely, while meeting global commitments outside the conflict region. The ensuing transformation reorganized the Army into brigade combat teams (BCTs), multifunctional and functional support brigades, and deployable, self-contained division and corps headquarters. The shift to a brigade-based Army with modular corps and division headquarters allowed the Army to tailor forces rapidly into expeditionary force packages that matched the combatant commander's requirements.

1-2. The BCT-based Army facilitated rotation of complete units rather than individual replacement. The BCTs become the centerpiece for Army maneuver. Today, the Army pools BCTs, multifunctional support brigades, and functional brigades into expeditionary force packages. The force package consists of infantry, Stryker, and armored BCTs; a variable mix of multifunctional and functional brigades; and division and corps headquarters as required. The two Reserve Components of the Army (Army Reserve and Army National Guard) making up about one-half of the total uniformed force, are integrated into the cycle of force packages identified for contingencies or deployment to an active operation. The force package combines Regular Army, Army National Guard, and U.S. Army Reserve units and Soldiers. (See ADP 1.)

1-3. The *National Military Strategy* and the *Joint Strategic Capabilities Plan* determine the combatant commanders' requirements for Army forces and operational requirements forecast by the combatant commanders. The Army meets its strategic responsibility to provide forces consistent with global requirements through the joint process known as global force management. The

force provider
A combatant commander or Secretary of a Military Department assigned to provide forces by the Secretary of Defense via a deployment order.

Army's process for identifying and providing forces is Army force generation (ARFORGEN). As part of joint global force management, FORSCOM executes functions, duties, and responsibilities as a Service force provider on behalf of the Secretary of the Army. As part of force generation, the Department of the Army, in conjunction with FORSCOM, establishes manning, training, and readiness cycles; assigns forces to headquarters; and manages modernization. Guidance provided through the Joint Chiefs of Staff, based on combatant commanders' input, establishes requirements for ARFORGEN. This in turn drives Regular Army, Army National Guard, and U.S. Army Reserve readiness cycles.

Service force provider
A subcategory of force provider. An organization designated by the Military Department Secretaries to provide trained and ready forces to combatant commands as directed by the Secretary of Defense. Possesses authorities, as delegated by Secretary of Defense to Military Department Secretaries (which Secretaries may further delegate) to exercise Training and Readiness Oversight, and provide global sourcing recommendations.

ARMY STRUCTURE

1-4. In addition to being the largest of the Armed Services, the Army has a greater variety of units than the other Services, each with different organizations and purposes. Therefore, the Army provides the combatant commander with an interlocking array of modular headquarters trained and equipped to apply landpower from the theater level, through the operational level, down to the tactical employment of various brigades, groups, and battalions. Together the theater army, corps, and division give the combatant commander a menu of options necessary for the employment of landpower in an interdependent joint force. Table 1-1 illustrates the variety of Army headquarters and units of brigade and larger size. The total number of units and organizations will vary from the numbers shown.

Table 1-1. The Army's structure

Element	*No. in Army*	*Description*	*Example Organizations*
Army command (ACOM)	3	ACOMs are four-star Service commands. All Army commands are part of the generating force.	TRADOC, AMC, FORSCOM
Direct reporting unit (DRU)	10	A DRU is a two- or three-star command under the Department of the Army. DRUs fulfill unique Army requirements as part of the generating force.	NETCOM, INSCOM, USACE
Army Service component command (ASCC)	8	The ASCC for each geographic combatant command is a theater army (5). There are three ASCCs for the functional combatant commands.	USARCENT, SDDC
Field army	1	A field army commands two or more corps in campaigns and major operations. EUSA is the ARFOR for U.S. Forces Korea, a subunified command of U.S. Pacific Command.	Eighth U.S. Army (EUSA) is the only field army
Other Army Service components	1	Other Army Service components may be a service component of USCYBERCOM, a subunified command of USSTRATCOM.	USARCYBER
Command	42	A command is a theater-level headquarters that commands functional brigades and provides support to deployed Army forces across the area of responsibility.	AAMDC, MEDCOM (DS)
Corps headquarters	3	A corps headquarters is the Army's primary operational-level headquarters. Each corps has training and readiness responsibilities for Army divisions.	I Corps, III Corps, XVIII Corps
Division	18	A division is the primary tactical headquarters for operations. Each division headquarters has training and readiness authority BCTs.	101st Abn Div (Regular Army); 40th Div (Army National Guard)

Table 1-1. The Army's structure (continued)

Element	*No. in Army*	*Description*	*Example Organizations*
Brigade combat team (BCT)	~64	There are three types of BCTs: Armored (ABCT), Infantry (IBCT), and Stryker (SBCT).	1st BCT 82d Abn Div (IBCT); 3d BCT 2d ID (SBCT)
Multifunctional support brigade	98	A multifunctional support brigade provides support to BCTs. Organization varies. Normally, attached to a division, but may be under a corps, or a joint or multinational headquarters. An ESC normally commands sustainment brigades and provides support on an area basis.	5 types of brigades: CAB; MEB; BFSB sustainment; fires
Functional support brigade	131	A functional support brigade is a brigade or group that provides a single function or capability. These brigades can provide support for a theater, corps, or division, depending upon how each is tailored. The organization varies extensively.	ADA, engineer, MP, signal, EOD, medical, regional support groups, theater aviation
Special functional support brigade	28	A special functional support brigade is a small brigade or group that augments echelon above brigade headquarters and manages Title 10 requirements.	AFSB, CSB, Space, TASM-G
Special operations unit and force	24	Special operations units and forces are brigades, groups, and regiments that support the conventional forces or operate under U.S. Special Operations Command.	Ranger, SF, and Special Operations Aviation
Ceremonial unit	1	The Old Guard provides national Army ceremonial support and has operational commitments. It is part of the operating force.	3rd Infantry Regiment

AAMDC U.S. Army Air and Missile Defense Command
Abn airborne
ADA air defense artillery
AFSB Army field support brigade
AMC Army Materiel Command
ARFOR senior Army component headquarters
BFSB battlefield surveillance brigade
CAB combat aviation brigade
CSB contracting support brigade
Div division
EOD explosive ordnance disposal
ESC expeditionary sustainment brigade
FORSCOM U.S. Army Forces Command
ID infantry division
INSCOM U.S. Army Intelligence and Security Command
MEB maneuver enhancement brigade
MEDCOM (DS) medical command (deployment support)
MP military police
NETCOM network command
No. number
SDDC Surface Deployment and Distribution Command
SF special forces
TASM-G Theater Aviation Sustainment Maintenance Group
TRADOC U.S. Army Training and Doctrine Command
U.S. United States
USACE U.S. Army Corps of Engineers
USARCENT U.S. Army, Central Command
USARCYBER U.S. Army Cyber Command
USCYBERCOM U.S. Cyber Command
USSTRATCOM U.S. Strategic Command

1-5. At the tactical level, subordinate units routinely operate in noncontiguous areas of operations. This contrasts sharply with the contiguous and hierarchical arrangement of land forces in operations prevalent in the large wars of the 20th century. Irregular warfare and hybrid threats have become commonplace. Massive battles involving multiple divisions are infrequent, while the intensity and lethality of small-unit engagements have increased. Army doctrine adapted, first embracing full spectrum operations and then evolving its operational concept to unified land operations. Both have at their core the necessity of simultaneous combinations of offensive, defensive, and stability tasks (or defense support of civil authorities within the homeland).

1-6. The configuration of today's higher echelon headquarters is determined less by their mobility than by their ability to command forces across vast land areas, while integrating joint capabilities, interagency support, and multinational forces. Commanders exercise mission command over widely dispersed formations while maintaining a common operational picture with higher headquarters and subordinates units.

THE RANGE OF MILITARY OPERATIONS

1-7. Joint doctrine divides operations into three broad categories illustrated in figure 1-1. Army forces provide versatile higher headquarters tailored for contingencies and capable of evolving so commanders can exercise mission command for campaigns and major operations. The Army provides headquarters for joint land operations and often provides JTF headquarters for contingency operations. The nature of counterinsurgency campaigns, such as those in Afghanistan and Iraq, require Army headquarters to function as joint and multinational integrators. As the nature of warfare continues to evolve, interactions among U.S forces and myriad indigenous and external groups will complicate every aspect of operations. While dealing with the complexities of multinational and interagency operations, the headquarters deploy, evolve, and tailor its organizations as the campaign progresses. As recent natural disasters showed, Army headquarters also enable commanders to exercise mission command for Regular Army, Army National Guard, and U.S. Army Reserve elements that respond to disasters of all types, whether at home or abroad.

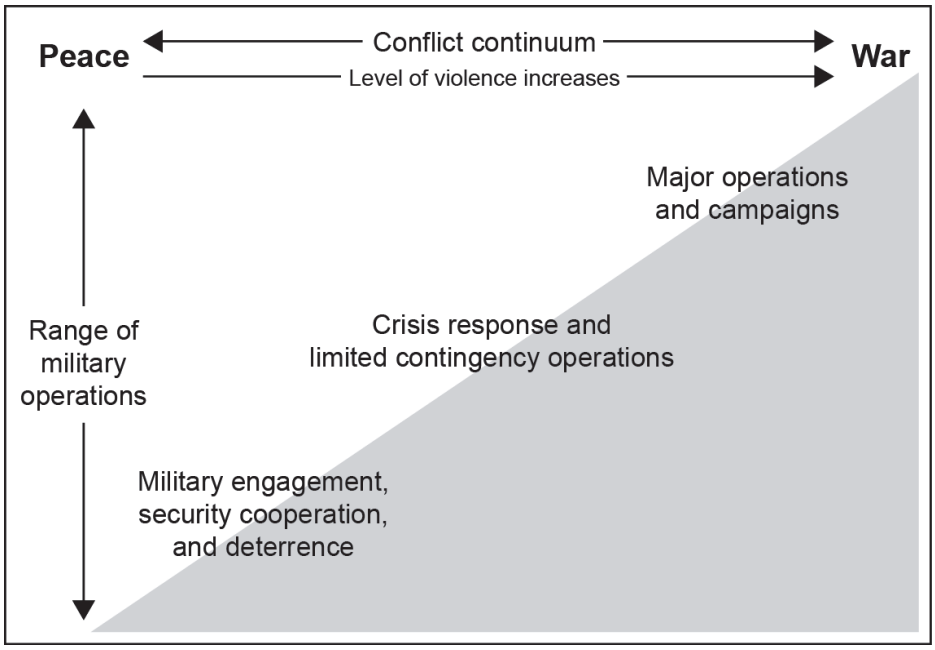

Figure 1-1. The range of military operations

COMBATANT COMMAND THROUGH TACTICAL HEADQUARTERS

1-8. Army transformation redesigned the division to be a self-contained headquarters instead of a fixed echelon with permanently assigned units. The division can command any combination of brigades, including up to five BCTs, for a particular mission. The corps headquarters received additional personnel and organic support. By adding to their organic communications, fire coordination, and life support, the division and corps headquarters became more flexible, no longer depending on subordinate units to reach full capability. This increased the flexibility of higher headquarters and allowed division and corps headquarters to adapt to diverse missions. Because the corps and division headquarters are self-contained, they are able to deploy with any mix of forces allowing for strategic flexibility during protracted campaigns. During the conflicts in Iraq and Afghanistan, division headquarters often commanded BCTs from posts across the Army, including Korea. The corps headquarters performed roles ranging from tactical command of maneuvering divisions to operational command of multinational forces charged with rebuilding a nation.

1-9. Army transformation restructured echelon-above-corps responsibilities to better support employment of Army forces in that geographic combatant command. In order to make a modular Army work, significant changes became necessary at echelons above corps. The Army Service component command

(ASCC) for each geographic combatant command became a dedicated theater army with a common design. The theater army is the primary interface between the combatant commander and the Department of the Army; it is responsible for administration and support of all Army forces assigned, attached, or under the operational control (OPCON) of the geographic combatant command. The theater army commander plans and requests tailored Army force packages. Tailoring the force requires the theater army to determine the composition of the force (how many and what types of units); its optimum deployment sequence given combatant commander priorities and available lift; and the initial command and support relationships. The theater army assumes responsibility for supporting all deployed Army forces in that AOR and OPCON of all Army forces within the AOR that are not OPCON to a JTF or subunified command. The theater army is responsible for reception, staging, onward movement, and integration (RSOI) of the Army force package into the joint force. Although the theater army grew in size in order to control Army forces operating across the AOR, the capability to use it as a field army commanding multiple army corps disappeared when the Army deleted the operational command post module built into the design.

COMBATANT COMMANDS

1-10. There are three types of combatant commands. *Functional combatant command*s have global responsibilities for U.S. military power, but do not have an AOR. *Geographic combatant commands* have a regional responsibility defined by an AOR. A *specified combatant command* (there is none currently) is established by the Secretary of Defense for a specific purpose and is normally composed of forces from a single military department. Every combatant command has an ASCC. Table 1-2 lists the existing combatant commands and their ASCCs.

Table 1-2. Combatant commands and their ASCCs

Combatant Command	*Army Service Component Command*
U.S. Pacific Command (GCC)	U.S. Army Pacific (theater army)
U.S. European Command (GCC)	U.S. Army Europe (theater army)
U.S. Central Command (GCC)	U.S. Army Central (theater army)
U.S. Africa Command (GCC)	U.S. Army Africa (theater army)
U.S. Southern Command (GCC)	U.S. Army South (theater army)
U.S. Northern Command (GCC)	U.S. Army North (theater army)
U.S. Transportation Command (FCC)	U.S. Army Surface Deployment and Distribution Command
U.S. Strategic Command (FCC)	U.S. Army Space and Missile Defense Command – Army Strategic Command
U.S. Special Operations Command (FCC)	U.S. Army Special Operations Command

FCC functional combatant command
GCC geographic combatant command
U.S. United States

THEATER ARMY

1-11. The theater army is the ASCC assigned to a geographic combatant command. It is organized, manned, and equipped to perform three roles:

- Theater army for the geographic combatant command to which it is assigned.
- JTF headquarters (with augmentation) for a limited contingency operation in that AOR.
- Joint force land component (with augmentation) for a limited contingency operation in that AOR.

1-12. The key tasks associated with its roles include:

- Serve as the primary interface between the Department of the Army, Army commands, and other ASCCs.
- Develop Army plans to support the theater campaign plan within that AOR.
- Tailor Army forces for employment in the AOR.
- Control RSOI for Army forces in the AOR.

- Exercise OPCON of deployed Army forces not subordinated to a joint force commander (JFC).
- Exercise administrative control (ADCON) of all Army forces operating within the AOR.
- Provide support as directed by the combatant commander to other Service forces, multinational forces, and interagency partners.
- Exercise OPCON of all joint forces attached to it as either a joint force land component command or JTF headquarters, as required by the combatant commander.
- Provide planning in support to the geographic combatant commander's (GCC's) strategic planning, theater campaign plan, theater posture plan, theater security cooperation plans, theater global force management planning, deliberate plans, and crisis action planning.

1-13. The combatant commander relies upon the theater army commander to integrate landpower into the GCC's plans for that AOR. The theater army coordinates with Department of the Army and the primary Service force provider, FORSCOM, to integrate combatant commander requirements within the global force management and ARFORGEN processes. The theater army coordinates through FORSCOM for theater-specific training and preparation of regionally aligned forces by providing Army Training Development Capability approved task names and task numbers to FORSCOM. As required, the theater army may also coordinate directly with supporting combatant command ASCCs if the Secretary of Defense directs the supporting combatant commander to provide forces. The gaining theater army commander recommends to the combatant commander the composition, sequence of deployment, and operational chain of command for Army forces deploying to the AOR. The theater army commander exercises OPCON as specified by the combatant commander and ADCON as specified by the Secretary of the Army. (See paragraph 1-51 for administrative control.)

1-14. The theater army performs a critical task in shaping the AOR for the geographic combatant command. The theater army maintains a theater wide focus in support of security cooperation. ADP 1 succinctly explains:

> *Shaping the strategic security environment improves the chance for peace around the world. It diminishes regional tensions and is therefore vital to American security interests. Each geographic combatant commander develops programs to improve regional stability and promote peace through security cooperation. American military capabilities can reassure allies, while dissuading adversaries. Shaping by itself cannot prevent conflict, but it nudges global regions away from military confrontation and increases the effect of diplomatic, informational, and economic instruments of national power… Soldiers are particularly important in this effort, since all nations have land security elements, even if lacking credible air and naval forces. To the degree that other nations see us as the best army in the world, they gravitate to us to help them achieve the same high standards of military performance, or tie their security to the world's most capable army.*
>
> ADP 1

1-15. As required, the theater army provides Army support to other Services (ASOS), provides common-user logistics, and carries out Department of Defense (DOD)-specified Service executive agent and combatant command support agent (CCSA) responsibilities in the AOR. These ARFOR responsibilities are discussed in more detail beginning with paragraph 1-64.

ARMY CORPS

1-16. The Army corps is the Army's most versatile headquarters. The corps must be as adept at planning a rapid noncombatant evacuation operation as supporting a multiyear major combat operation. The Army corps is deployable and scalable to meet almost every requirement of the combatant commander for a senior level headquarters. The corps now functions as the principal integrator of landpower into campaigns and is the link between the operational and tactical levels of war. In the conflicts in Afghanistan and Iraq, for example, U.S. Army corps has commanded all land forces in those countries. The corps is the preferred Army headquarters for joint augmentation and employment as a JTF. As a joint or multinational land component command, an Army corps headquarters commands multiple Army divisions, brigades, and other formations, and multinational forces and organizations. The corps headquarters often functions as the

ARFOR (a senior headquarters) for deployed Army forces, exercising command over Army forces in a joint operations area and prioritizing the extensive support provided by the theater army against the tactical needs of joint and multinational forces. (See paragraph 1-57 for discussion of ARFOR.)

1-17. The corps headquarters is an essential element of the Army's expeditionary capabilities. These capabilities enable the Army to deploy combined arms forces into any AOR and operate effectively upon arrival. Contingency operations require the corps and its subordinate forces to deploy quickly and set conditions to seize the initiative and accomplish the mission. The corps is organized, manned, and equipped to serve in four roles:

- Provide the ARFOR within a joint force for campaigns and major operations.
- Serve as the joint or multinational land component command headquarters (with augmentation) in campaigns and major operations.
- Serve as a JTF headquarters (with augmentation) for crisis response and limited contingency operations.
- Serve as a tactical headquarters commanding 2 to 5 Army divisions together with supporting brigades and commands in campaigns and major operations.

1-18. The key tasks involved in these roles include:

- Command Marine Corps and multinational brigades and divisions.
- As a supported component, integrate supporting joint capabilities with landpower within a joint operations area.
- As a supporting component, integrate Army capabilities with supported component operations.
- Exercise ADCON over Army forces in a joint operations area as specified by the ASCC.
- Integrate special operations forces (SOF) with conventional force operations.
- Provide ASOS as required by the JFC.

Each of these roles and tasks is discussed in detail in chapter 4.

ARMY DIVISION

1-19. The division headquarters operates as a tactical headquarters under OPCON of an Army corps or Marine expeditionary force headquarters. It may become a joint force land component headquarters. In limited contingency operations, it may become a JTF. As a tactical echelon of command, the division task-organizes subordinate units and specifies the command or support relationships needed. The division assesses the effort required for offensive, defensive, and stability tasks in its area of operations and organizes its subordinate units accordingly. The division headquarters sets the conditions for employment of its brigades, then controls and synchronizes their tactical actions. The division allocates resources, designates the main effort as required, forecasts operational requirements, and establishes priorities of support. Sustainment and other functional units (military police, engineer, air and missile defense, and military intelligence) provide support in accordance with priorities established by the supported division commander. The historical designations of the division headquarters, such as the 1st Cavalry Division, do not necessarily reflect the capabilities of the subordinate forces task-organized under them.

1-20. The roles of the division include:

- Serve as a tactical headquarters in campaigns and major operations.
- Serve as the joint and multinational land component headquarters under a JTF in crisis response and limited contingency operations.
- Serve as a JTF headquarters (with augmentation) for limited contingency operations.
- Serve as the ARFOR within a JTF in crisis response and limited contingency operations.

1-21. Key tasks for the division include:

- Command two to five BCTs together with supporting brigades in decisive action.
- Serve as the joint or multinational land component headquarters under a JTF (or multinational JTF) in crisis response and limited contingency operations.

- Exercise tactical control (TACON) over Marine Corps and multinational forces.
- Exercise ADCON over attached Army forces.

Each of these roles and tasks is discussed in detail in chapter 6.

COMMON DESIGN, DIFFERENT MANNING

1-22. The theater army, corps, and division headquarters derive from a common design philosophy. Although commanders have the authority to reorganize the headquarters to best suit the requirements of the mission, the base design of echelon above brigade headquarters stems from a set of design criteria and organizational principles.

1-23. The basis for the organizational design is warfighting functions. There are five functional cells in the headquarters design—intelligence, movement and maneuver, fires, protection, and sustainment. Elements from coordinating and special staff sections (and in some cases, the personal staff) work within the functional cells. Most of the functional cells contain representatives from different coordinating and special staff sections; however, their activities fall within that warfighting function. The example protection cell in figure 1-2 might include provost marshal; chemical, biological, radiological, and nuclear (CBRN); safety; and personnel recovery. Each of the five functional cells has as its chief the senior officer from a coordinating staff section. Normally, the chief of the protection cell will be a special staff officer. The sixth warfighting function, mission command, does not form a separate functional cell. The function of mission command applies to the entire headquarters. The chief of staff directly supervises the coordinating and special staff sections that do not work within a functional cell.

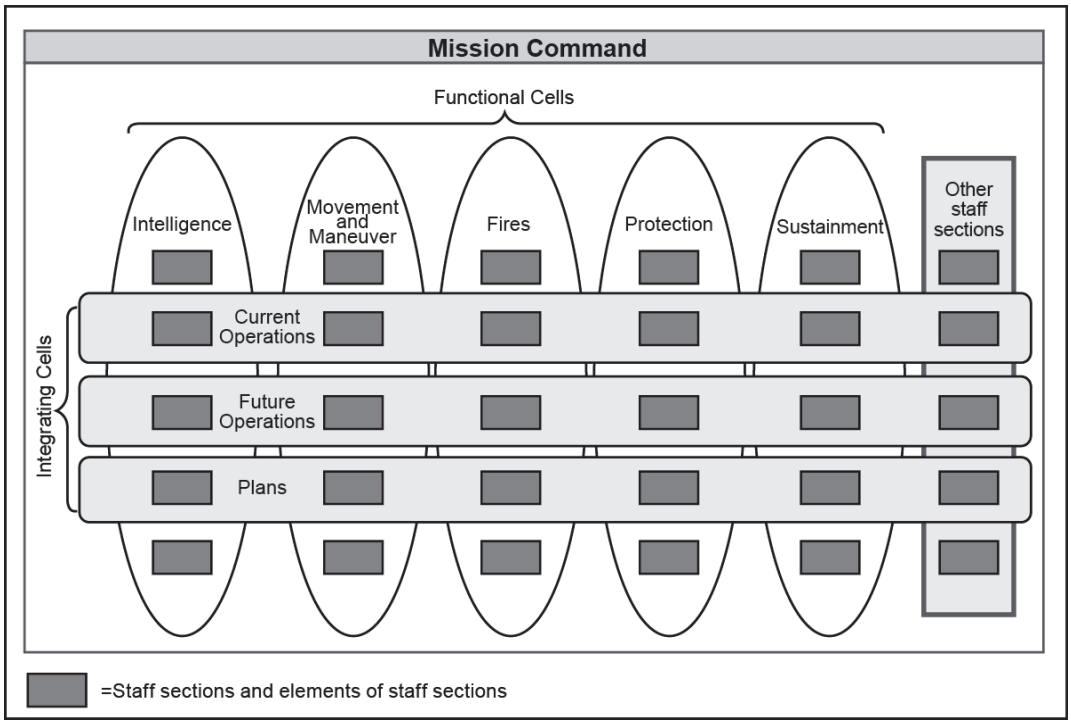

Figure 1-2. Functional and integrating cells

1-24. The movement and maneuver cell provides the nucleus for the three integrating cells—current operations integrating, future operations, and plans. Integrating cells group personnel and equipment by planning horizon. The current operations integrating, future operations, and plans cells assist the commander in integrating the warfighting functions within the short-, mid-, and long-range planning horizons respectively.

1-25. Each headquarters contains a commander; a command group; and coordinating, special, and personal staff. Most coordinating and special staff sections divide into functional and integrating cells, normally on a permanent basis. Designated staff sections, for example the G-6, normally report to the chief of staff directly. The reporting channels for the personal staff vary within each command. Regardless of echelon, the headquarters design provides for a main command post and a smaller, more mobile forward command post. The latter is a contingency command post within the theater army structure and a tactical command post at the corps and division levels. All three echelons have a headquarters and headquarters battalion (HHB), although the structure for each echelon's headquarters battalion differs. Rank and grade structures also vary.

1-26. The higher headquarters design is based on the concept of matrix organizations. Staff cells, centers, and working groups are organized into functional teams working together on a single line of effort or a common purpose. This functional design facilitates the vertical integration of the staff elements in permanent or ad hoc organizations. Multiple lines of effort meet in three permanently organized integrating cells. The three integrating cells combine multiple functions and allow the commander considerable flexibility to integrate the operation by planning horizon or by phases of the operation. A network and suite of mission command systems enhance the ability to plan and coordinate operations across these staff sections, cells, command posts, and echelons.

1-27. Vertical integration groups closely related tasks and functions. These groupings form the basis for establishing five functional cells: intelligence, movement and maneuver, fires, protection, and sustainment functional cells. Although described as functional cells, in reality, the cells contain subject matter experts from multiple staff sections. For example, the sustainment warfighting function involves logistics, personnel, medical, and resource management tasks, and the sustainment warfighting function cell includes personnel with the appropriate skills, training, and experience to perform those tasks. The sustainment warfighting function cell usually has personnel from the G-1, G-4, and G-8 staff sections and medical staff element. The functional cells provide a standardized method of vertically integrating closely related tasks.

1-28. Horizontal integration occurs in three integrating cells that synchronize across three planning horizons (or by the phases of the operation). Like the functional cells, the integrating cells (current operations integrating, future operations, and plans) are matrix organizations established around core elements organized as components of the movement and maneuver functional cell. In addition to the core elements, all the functional cells and special staff elements are represented in the integrating cells, either on a permanent basis or as required by the situation. Each headquarters has a command group, personal staff officers, coordinating staff officers, and special staff officers. (See ADRP 6-0 for a more detailed discussion of their responsibilities). For each headquarters, the table of organization and equipment (known as TOE) documents personnel by section and organizational design. The organizational design derives from warfighting functions and reflects the organization of the staff for operations.

Functional Cells

1-29. The organizational design of each headquarters allocates personnel against six warfighting functions—intelligence, movement and maneuver, fires, protection, sustainment, and mission command. The staff in the intelligence, fires, protection, and sustainment warfighting functions form functional cells and reinforce the integrating cells with subject matter experts. The movement and maneuver function becomes the basis for the integrating cells—current operations integrating, future operations, and plans—under the overall supervision of the G-3. As dictated by the situation, the chief of staff forms temporary teams such as working groups, boards, and centers.

1-30. The distribution of the mission command warfighting function is unique because mission command is both the purpose of the headquarters and the warfighting function enabled by the entire staff. The function includes elements that support the entire headquarters and enable it to operate, for example network operations and knowledge management. It also includes highly specialized personnel, such as intelligence analysts, space operations officers, cyber electromagnetic activities (CEMA) personnel, or civil affairs specialists. It includes the command group, personal staff, information operations officer, and civil affairs operations section. Typically, the battle roster distributes some special staff sections under a functional cell while other sections merge into one of the three integrating cells. The chief of staff normally

supervises the G-6 and designated special staff sections. The arrangement of responsibility between the chief of staff and the functional and integrating cells depends upon the mission variables. (See ADRP 6-0.)

Integrating Cells

1-31. Echelons above brigade have three integrating cells—current operations integrating, future operations, and plans. Whereas functional cells focus on a particular function (such as fires), the integrating cells are organized by planning horizons (see figure 1-3). The current operations integrating cell, future operations cell, and plans cell coordinate and synchronize forces and capabilities within a specified planning horizon. A *planning horizon* is a point in time commanders use to focus the organization's planning efforts to shape future events (ADRP 5-0). The three planning horizons are long, mid, and short. In general, long-term planning is associated with the plans cell, mid-term planning with the future operations cell, and short-term planning with the current operations integrating cell. Planning horizons are situation dependent; they can range from hours and days to weeks and months. As a rule, the higher the echelon, the more distant the planning horizon with which each integrating cell is concerned. The G-3 allocates integrating cell personnel between the main command post and smaller deployable command posts. Normally, the tactical or contingency command posts have a core group of current operations staff augmented by individuals from plans and future operations cells according to the situation.

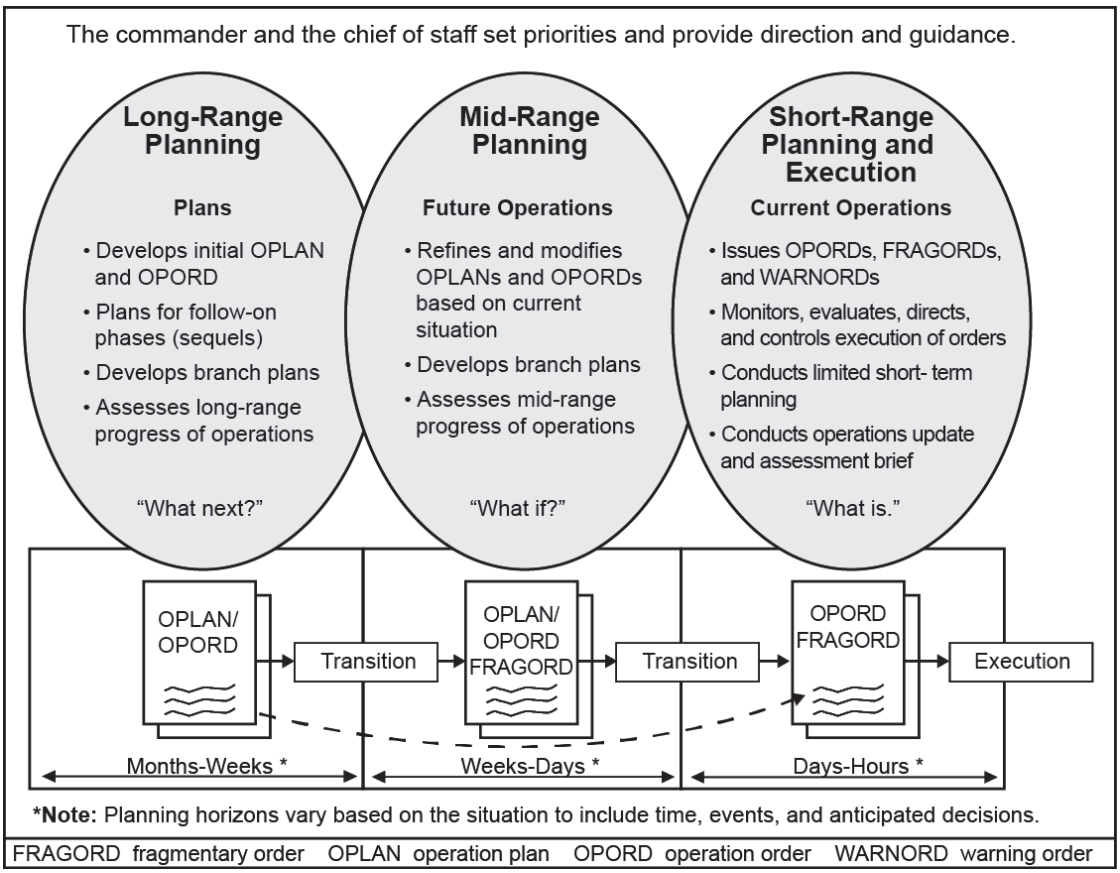

Figure 1-3. Planning horizons for integrating cells

Flexible Staff Organization

1-32. The complexity of land operations—constant adjustment between the elements of decisive action, multiple lines of effort and operations, and frequent changes to task organization—requires agility and teamwork throughout the staff. The Army designed echelons above brigade to have the flexibility to meet these challenges. The commander and chief of staff adjust expertise across the staff according to the

situation and do not adhere rigidly to the organizational document. The organization of each echelon's staff varies according to the mission, tailored force structure, multinational responsibilities, and other circumstances.

1-33. The functional structure of the staff allows the commander and chief of staff considerable flexibility to shift expertise among functional cells, integrating cells, centers, and temporary teams (such as boards and working groups). It also allows the commander and chief of staff to adjust manning levels between the various command posts employed by different echelons. For example, a corps headquarters on alert during a crisis will expand its plans cell. Subsequently, the corps commander might deploy the corps tactical command post with a deputy corps commander to the crisis area of operations. The chief of staff reinforces the tactical command post with a small combined plans cell, a future operations cell, and additional sustainment experts. When the main command post deploys, the staff reorganizes again, and the tactical command post loses its planners. In another example, a division headquarters deployed in response to a domestic disaster (a defense support of civil authority mission) will reorganize. Because of domestic legal constraints, the chief of staff may redistribute the intelligence cell into the integrating cells to provide "incident awareness and assessment" (see ADRP 3-28). Since there will be no requirement for fire support, the chief of staff may shift personnel from the fires cell to liaison duties, airspace coordination, and rescue coordination.

1-34. Figure 1-4 and figure 1-5 (pages 1-12 and 1-13 respectively) illustrate the design of echelons above brigade headquarters. Echelons above brigade have large staffs to support the commander. Regardless of whether the headquarters is a theater army, corps, or division, each has a command group, personal staff, coordinating staff, and special staff, as shown in figure 1-4. In general, the personal staff works for the commanding general. The coordinating staff and special staff work for the chief of staff. (ADRP 6-0 discusses personal, coordinating, and special staff sections in more detail.)

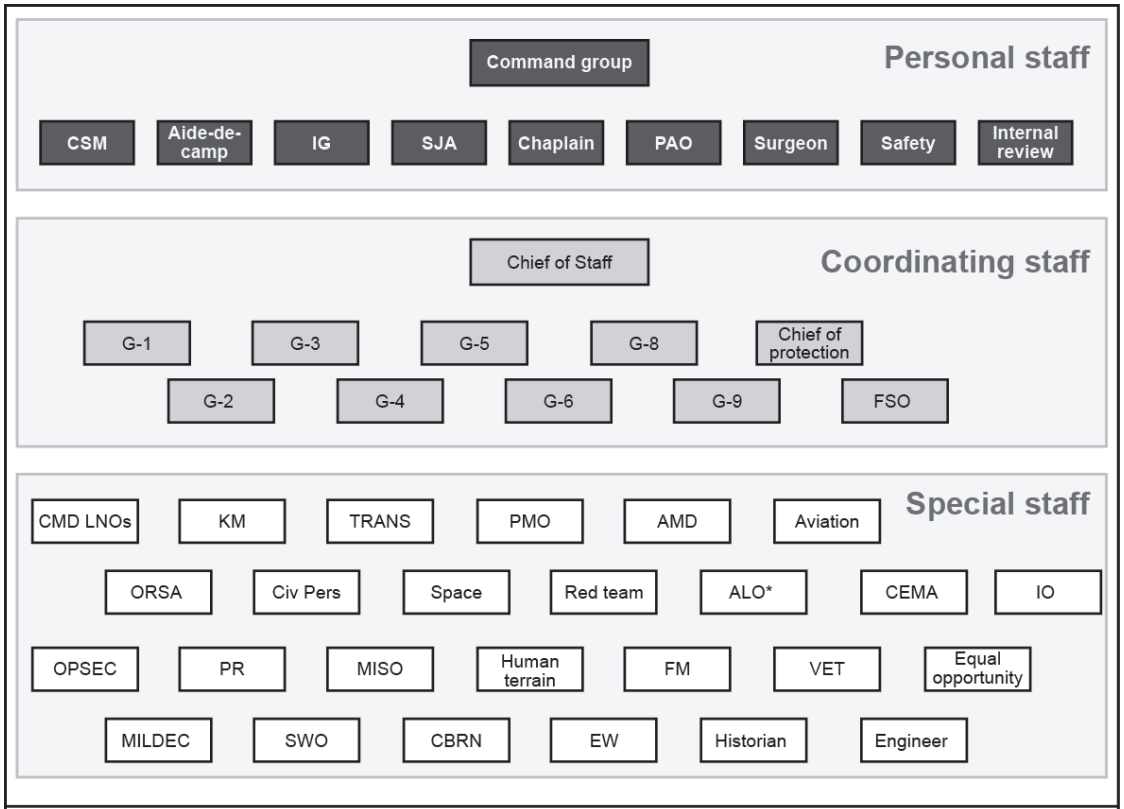

ALO	air liaison officer	IG	inspector general
AMD	air and missile defense	IO	information operations
CBRN	chemical, biological, radiological, and nuclear	KM	knowledge management
CEMA	cyber electromagnetic activities	LNO	liaison officer
Civ	civilian	MILDEC	military deception
CMD	command	MISO	military information support operations
CSM	command sergeant major	OPSEC	operations security
EW	electronic warfare	ORSA	operations research and systems analysis
FM	force management	PAO	public affairs officer
FSO	fire support office	Pers	personnel
G-1	assistant chief of staff, personnel	PMO	provost marshal office
G-2	assistant chief of staff, intelligence	PR	personnel recovery
G-3	assistant chief of staff, operations	SJA	staff judge advocate
G-4	assistant chief of staff, logistics	SPT	support
G-5	assistant chief of staff, plans	SWO	staff weather officer
G-6	assistant chief of staff, signal	TRANS	transportation
G-8	assistant chief of staff, financial management	VET	veterinary
G-9	assistant chief of staff, civil affairs operations		

Figure 1-4. Distribution of staff sections within a main command post

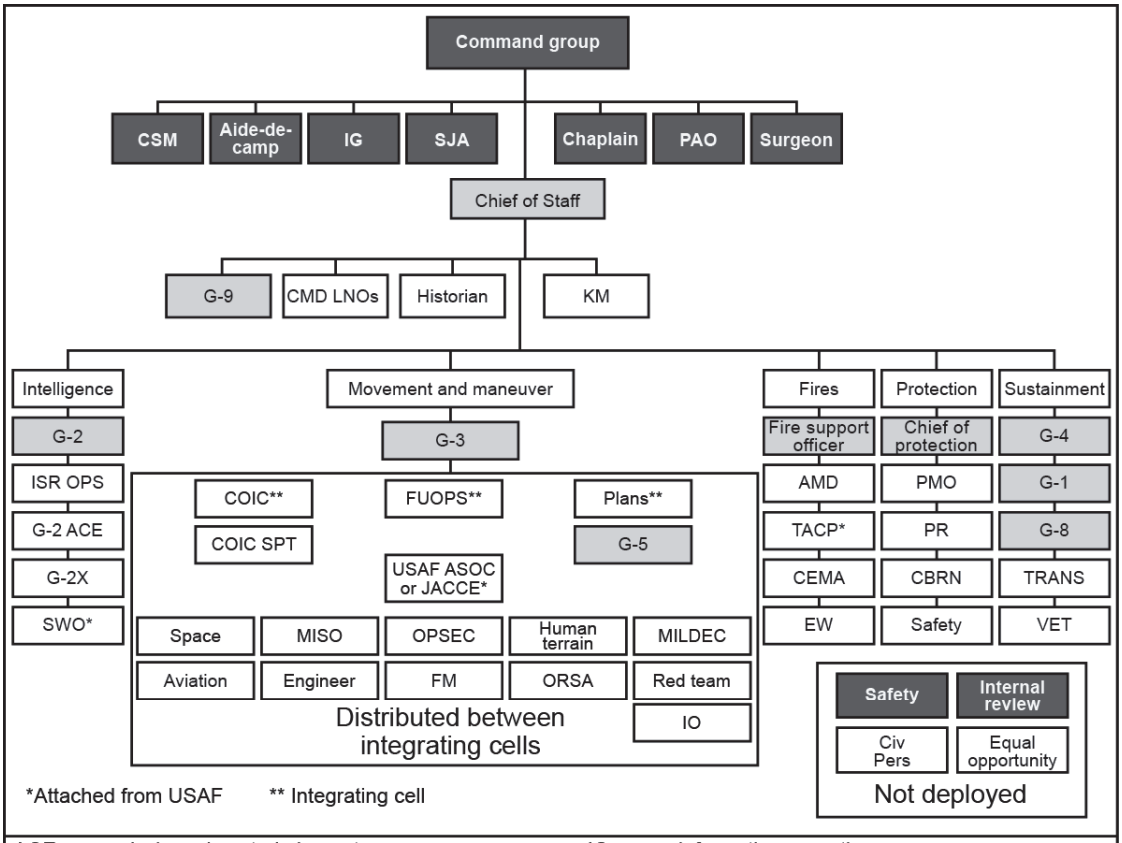

ACE	analysis and control element	IO	information operations
AMD	air and missile defense	ISR	intelligence, surveillance, and reconnaissance
ASOC	air support operations center	JACCE	joint air component coordination element
CBRN	chemical, biological, radiological, and nuclear	KM	knowledge management
CEMA	cyber electromagnetic activities	LNO	liaison officer
CIV	civilian	MILDEC	military deception
CMD	command	MISO	military information support operations
COIC	current operations integrating cell	OPS	operations
CSM	command sergeant major	OPSEC	operations security
EW	electronic warfare	ORSA	operations research and systems analysis
FM	force management	PAO	public affairs officer
FUOPS	future operations	Pers	personnel
G-1	assistant chief of staff, personnel	PMO	provost marshal office
G-2	assistant chief of staff, intelligence	PR	personnel recovery
G-2X	assistant chief of staff, human intelligence	SJA	staff judge advocate
G-3	assistant chief of staff, operations	SPT	support
G-4	assistant chief of staff, logistics	SWO	staff weather officer
G-5	assistant chief of staff, plans	TACP	tactical air control party
G-6	assistant chief of staff, signal	TRANS	transportation
G-8	assistant chief of staff, financial management	USAF	United States Air Force
G-9	assistant chief of staff, civil affairs operations	VET	veterinary
IG	inspector general		

Figure 1-5. Example of echelons above brigade command post

1-35. Organizational designs of the headquarters at theater army, corps, and division utilize a staff structure based upon the warfighting functions. Figure 1-5 provides a sample echelons above brigade headquarters. The personal staff works directly for the commander. Most of the coordinating and special staff separate into cells derived from the warfighting functions. Five cells—intelligence, movement and maneuver, fires, protection, and sustainment—receive the bulk of the sections. The movement and maneuver cell is the largest and includes three integrating cells: current operations, future operations, and plans. The mission command warfighting function does not have a distinct cell since the entire headquarters supports mission

command. However, coordinating staff elements that enable the tasks within the mission command warfighting function such as the G-6 and G-9 often work directly for the chief of staff. Note that some of the personal and special staff may remain at home station; this is situation dependent. The corps and division receive large elements from the U.S. Air Force. Depending upon echelon and mission, different headquarters will organize differently. A modified table of organization and equipment (known as MTOE) delineates the specific organization, and the commander modifies the structure further based upon the role and mission of that particular headquarters.

1-36. Other factors can alter the staff organization as well. If the headquarters is multinational in composition, the commander may adjust it to fit the staff organization familiar to the international forces. This is typically a derivative of the G-staff model, with G-1 through G-9 replacing the cells based on warfighting functions. If the headquarters becomes a JTF, it reorganizes accordingly. Individual experience and skill qualification play an important part. The most important determinant, however, remains the needs of the commander. The commander communicates anticipated decisionmaking needs, and the staff adjusts its organization and priorities accordingly.

1-37. Each echelon headquarters has a different table of organization and equipment, and each organizational design is in the respective chapters on theater army, corps, and division. A modified table of organization and equipment specifies the actual organization for each theater army, corps, and division headquarters. The commander modifies the staff organization further based upon roles and missions assigned.

OPERATIONAL AND ADMINISTRATIVE CHAINS OF COMMAND

1-38. Echelons above brigade exercise a mixture of OPCON and ADCON over subordinate forces. As described in JP 1, the President and Secretary of Defense exercise authority and control of the armed forces through two distinct branches of the chain of command. One branch runs from the President, through the Secretary of Defense, to the combatant commanders for missions and forces assigned to combatant commands. This is the operational chain of command. For purposes other than the operational direction of combatant commands, the chain of command runs from the President to the Secretary of Defense, to the secretaries of the military departments, and, as prescribed by the secretaries, to the commanders of U.S. forces. Each military department operates under the authority, direction, and control of the secretary of that military department. This is the ADCON of forces. (See figure 1-6.)

1-39. At brigade and below, the distinction between the branches of command is small because in most cases the operational and administrative chains are the same. The brigade commander is responsible for the operations and administration of the brigade and all Army units attached to it. Above the brigade, the responsibilities associated with the operational and administrative chains multiply. At the theater army echelon, the support needed by deployed Army and joint forces requires not only the theater army headquarters, but also large support commands. The theater army provides essential sustainment to the corps through sustainment and medical commands. The theater echelon reduces the workload imposed on the operational headquarters by shifting the sustainment, support to other Services, and multinational and CCSA requirements from the corps and division. Without it, the support requirements could overwhelm the ability of the corps and division to exercise effective operational command of their subordinate forces.

OPERATIONAL CHAIN OF COMMAND

1-40. The assignment of forces to the combatant commands comes from the Secretary of Defense in the Forces for Unified Commands memorandum, and force assignments are documented in the *Global Force Management Implementation Guidance* assignment tables. According to the *Global Force Management Implementation Guidance*, unless otherwise directed by the President or the Secretary of Defense, all forces operating in the geographic area assigned to a combatant commander are assigned or attached to that combatant commander. A force assigned or attached to a combatant commander may be transferred from that commander to another

> ***Global Force Management Implementation Guidance***
> Guidance issued by the Secretary of Defense which codifies the processes used by Department of Defense to execute Global Force Management. The text in this document is updated in even fiscal years and the Force Assignment tables are updated every fiscal year.

combatant commander only when directed by the Secretary of Defense and approved by the President. The Secretary of Defense specifies the command relationship the gaining commander will exercise (and the losing commander will relinquish). Establishing authorities for subordinate unified commands and JTFs may direct the assignment or attachment of their forces to those subordinate commands and delegate the command relationship as appropriate. (See JP 1.)

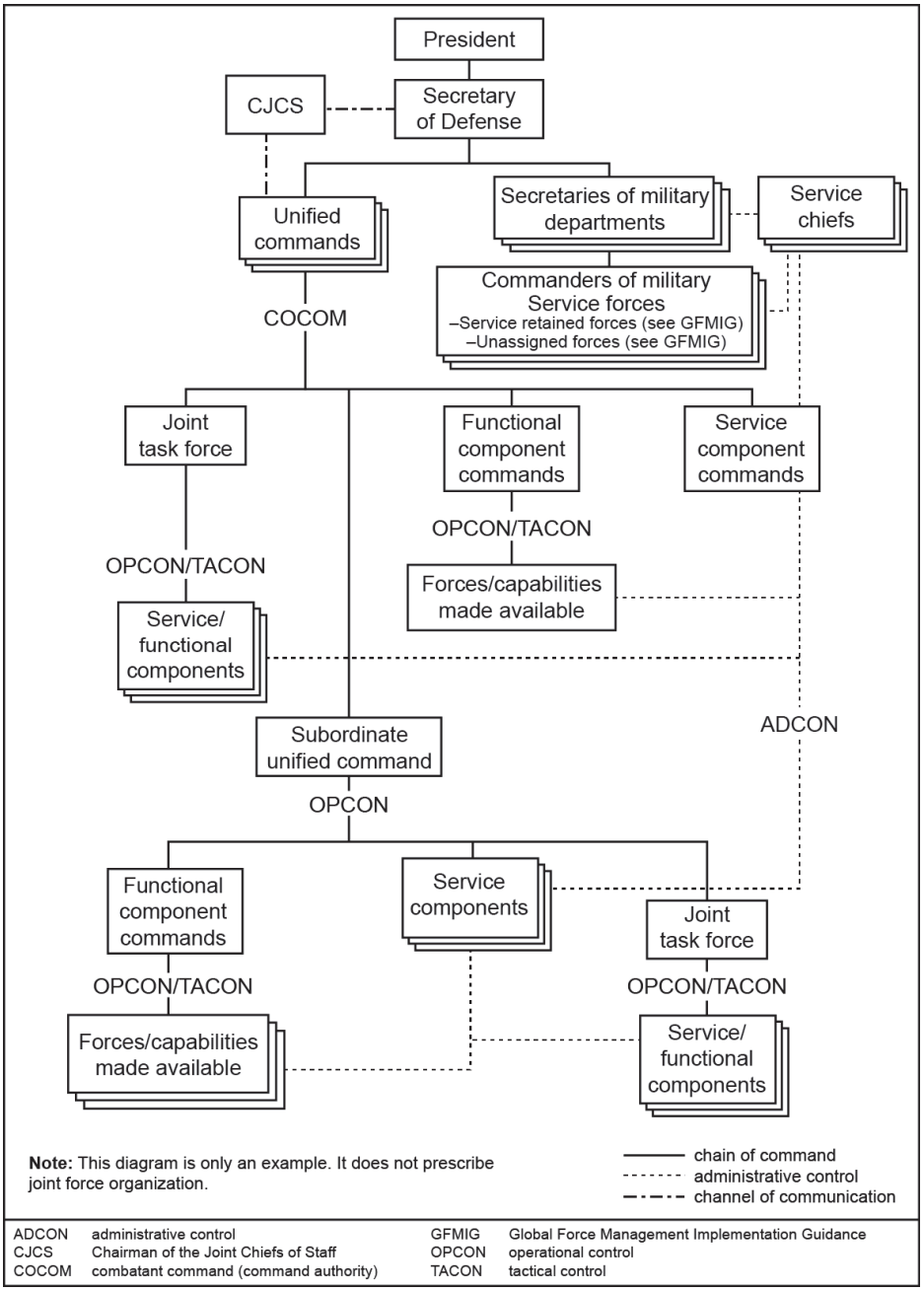

Figure 1-6. The operational chain of command and administrative control

1-41. Inherent in command is the authority that a military commander lawfully exercises over subordinates including authority to assign missions and accountability for their successful completion. Although commanders may delegate authority to accomplish missions, they may not absolve themselves of the responsibility for the accomplishment of these missions. Authority is never absolute; the establishing

authority specifies its extent in accordance with DOD directives, and U.S. law. The specific command relationship—combatant command (command authority) (COCOM), OPCON, TACON, and support—will define the level of authority each commander has over assigned or attached forces. (See table 1-3 for a brief summary of the joint command relationships.)

Table 1-3. Joint command relationships

Joint Relationship	*Description (Extracted from JP 1)*
Combatant command (command authority) (COCOM)	COCOM is the command authority over assigned forces vested only in the commanders of CCMDs and cannot be delegated or transferred. COCOM provides full authority for a combatant commander to perform those functions of command over assigned forces involving organizing and employing commands and forces, assigning tasks, designating objectives, and giving authoritative direction over all aspects of military operations and joint training.
Operational control (OPCON)	OPCON is exercised by commanders at any echelon at or below the level of a CCMD and may be delegated within the command. OPCON can be delegated from a lesser authority than COCOM. It provides authority for organizing and employing subordinate forces, assigning tasks, designating objectives, and giving authoritative direction over all aspects of military operations and joint training necessary to accomplish the mission. Normally, this authority is exercised through subordinate JFCs, Service commanders, and/or functional component commanders. OPCON provides authority to organize and employ commands and forces as the commander considers necessary to accomplish missions. It does not include authoritative direction for logistics or matters of administration, discipline, internal organization, or unit training.
Tactical control (TACON)	TACON is an authority over assigned or attached forces or commands, or military capability or forces made available for tasking, that is limited to the detailed direction and control of movements and maneuvers within the operational area necessary to accomplish missions or tasks assigned by the commander exercising OPCON or TACON of the attached force. TACON does not provide the authority to give or change the function of the subordinate commander, or modify the organization of the subordinate unit.
Support	Support is a command authority. A support relationship is established by a common superior commander between subordinate commanders when one organization should aid, protect, complement, or sustain another force. The support command relationship is used by SecDef to establish and prioritize support between and among combatant commanders, and it is used by JFCs to establish support relationships between and among subordinate commanders. The designation of supporting relationships is important as it conveys priorities to commanders and staffs that are planning or executing joint operations. The establishing authority (the common JFC) ensures that both the supported and supporting commanders understand the degree of authority that the supported commander is granted.

CCMD combatant command JFC joint force commander SecDef Secretary of Defense

1-42. The typical operational chain of command extends from the combatant commander to a JTF commander, then to a functional component commander or a Service component commander. JTFs and functional component commands, such as a joint force land component, comprise forces that are normally subordinate to a Service component command but placed under the OPCON of the JTF, and subsequently to a functional component commander. Conversely, the combatant commander may designate one of the Service component commanders as the JTF commander or as a functional component commander. In some cases, the combatant commander may not establish a JTF, retaining OPCON over subordinate functional commands and Service components directly.

1-43. A JTF is the organization most often used by a combatant commander for contingencies. Combatant commanders establish JTFs and designate the JFCs for these commands. Those commanders exercise OPCON of all U.S. forces through functional component commands, Service components, subordinate JTFs, or a combination of these. (See JP 3-33.)

1-44. Support is a command authority in joint doctrine. When one organization should aid, protect, complement, or sustain another force, a supported and supporting relationship is established by a superior commander between subordinate commanders. Designating a support relationship does not provide authority to organize and employ commands and forces, nor does it include authoritative direction for administrative and logistics support.

1-45. JP 1 specifies four categories of support:

- General support.
- Mutual support.
- Direct support.
- Close support.

1-46. General support is that support that is given to the supported force as a whole and not to any particular subdivision thereof. Mutual support is that support that units render each other against an enemy because of their assigned tasks, their position relative to each other and to the enemy, and their inherent capabilities. Direct support is a mission requiring a force to support another specific force and authorizing it to answer directly to the supported force's request for assistance. Close support is that action of the supporting force against targets or objectives that are sufficiently near the supported force as to require detailed integration or coordination of the supporting action with the fire, movement, or other actions of the supported force.

1-47. Joint support is somewhat vague but very flexible. Establishing authorities ensure both supported and supporting commanders understand the authority of supported commanders. JFCs often establish supported and supporting relationships among components. For example, the maritime component commander is normally the supported commander for sea control operations; the air component commander is normally the supported commander for counterair operations. For example, an Army corps headquarters designated as the joint force land component may be the supporting force during some campaign phases and the supported force in other phases. Often the JFC specifies only a supported and supporting relationship between forces. In that case, the supporting force will be in general support.

Note. A joint support relationship is not used when an Army commander task-organizes subordinate Army forces. When task-organized to support another Army force, Army forces use one of four Army support relationships. (See ADRP 5-0.)

1-48. The JFC may establish a support relationship between functional and Service component commanders. Conducting operations across a large operational area often involves both the land and air component commanders. The JTF commander places the joint force land component in general support of the air component until the latter achieves air superiority. Conversely, within the land area of operations, the joint force land component commander (JFLCC) becomes the supported commander and the air component commander provides close support.

1-49. When an Army corps headquarters becomes the joint force land component as part of a JTF, Army units subordinated to it are normally attached, and OPCON is inherent. Marine Corps forces made available to a joint force land component are normally under TACON, but the JFC may specify an OPCON relationship. (See JP 3-31.) The JFLCC makes recommendations to the JFC on properly using attached, OPCON, or TACON assets; planning and coordinating land operations; and accomplishing such operational missions as assigned.

1-50. When the Secretary of Defense assigns Army forces to a combatant command, the transfer is either permanent or the duration is unknown but very lengthy. The combatant commander exercises COCOM over assigned forces. When the Secretary of Defense allocates Army units (from FORSCOM or a supporting combatant command) to another combatant command, the transfer of units is relatively temporary. Allocated forces normally return to their parent combatant command at the end of the deployment. The combatant commander exercises OPCON of the allocated force. In either case, the combatant commander normally exercises OPCON over Army forces through the ASCC until the combatant commander establishes a JTF and functional components. At that time, the combatant commander delegates OPCON to the JTF commander. When the JFC establishes any command

relationship (including a joint support relationship), the theater army clearly specifies sustainment responsibilities for all affected Army commanders.

ADMINISTRATIVE CONTROL

1-51. *Administrative control* is direction or exercise of authority over subordinate or other organizations in respect to administration and support (JP 1). This administration and support includes organization of Service forces, control of resources and equipment, personnel management, unit logistics, individual and unit training, readiness, mobilization, demobilization, discipline, and other matters not included in the operational missions of the subordinate or other organizations. It is a Service authority, not a joint authority. ADCON is exercised under the authority of and is delegated by the Secretary of the Army. ADCON is synonymous with the Army's Title 10 authorities and responsibilities. (See DODD 5100.01.)

1-52. ADCON does not necessarily follow to the operational chain of command at echelons above brigade. Unless modified by the Secretary of the Army, administrative responsibilities normally flow from Department of the Army through the ASCC to those Army forces assigned, attached, or OPCON to that combatant command. As the ASCC, the theater army delegates ADCON as required to Army forces attached by the combatant commander to a joint (or joint and multinational) task force. The ARFOR commander and associated headquarters exercises ADCON of Army forces within that JTF as specified by the theater army commander.

ARMY SERVICE COMPONENT COMMAND

1-53. The *Army Service component command* is the command responsible for recommendations to the joint force commander on the allocation and employment of Army forces within a combatant command (JP 3-31). The ASCC is the senior Army command assigned to a combatant command. It consists of the Army Service component commander and all those Army forces, such as individuals, units, detachments, organizations, and installations under that command, including the support forces assigned to a combatant command or further assigned to a subordinate unified command. If the combatant commander of a geographic combatant command establishes a subordinate unified command, the Department of the Army will form an Army component headquarters appropriate for that subordinate unified command.

1-54. The Secretary of the Army may redirect some or all Service responsibilities outside the normal ASCC channels. In similar fashion, the ASCC may distribute some administrative responsibilities outside the ARFOR. They primarily focus on the effectiveness of Army forces and the care of Soldiers.

1-55. Shared ADCON refers to the internal allocation of Title 10, United States Code (known as USC), section 3013(b) responsibilities and functions. ASCCs usually share ADCON for at least some administrative or support functions. This is especially true for Reserve Component forces. Certain administrative functions, such as pay, stay with the Reserve Component headquarters even after unit mobilization. Shared ADCON also applies to direct reporting units of the Army that typically perform single or unique functions. The direct reporting unit, rather than the ASCC, typically manages individual and unit training for these units. The Secretary of the Army directs shared ADCON. For example, the theater army normally divides ADCON responsibilities for a military intelligence brigade stationed in that AOR. INSCOM manages intelligence-specific equipment, activities, manning, and funding. The theater army manages facilities, common item maintenance, and discipline.

1-56. Each theater army will have operational and administrative responsibilities. Through assignment or attachment of Army forces to that geographic combatant command by the DOD, the theater army exercises OPCON of all Army forces until the combatant commander attaches those forces to a subordinate joint command. Regardless of whether Army forces are OPCON to the theater army or not, the theater army commander retains responsibility for ADCON of all Army forces. Although the responsibility for ADCON of Army forces within the AOR remains with the theater army commander, that responsibility involves the entire Army.

ARFOR

1-57. By definition, the ***ARFOR*** **is the Army component and senior Army headquarters of all Army forces assigned or attached to a combatant command, subordinate joint force command, joint functional command, or multinational command.** The ARFOR is the Army component of any joint force. (See JP 1 and JP 3-0.) Army doctrine distinguishes, however, between the Army component of a combatant command and that of a joint force formed by the combatant commander. The Army component of the combatant command is an ASCC, and the Army component of the subordinate joint force is an ARFOR.

ARFOR IN A SUBORDINATE JOINT FORCE

1-58. All JTFs that include Army forces have an ARFOR. The ARFOR consists of the Army commander, the commander's associated headquarters, and all Army forces attached to the JTF. The ARFOR provides administrative and logistics support to all Army forces and retains OPCON over Army units not subordinate to another component of the JTF. The senior Army officer assigned to the JTF, not in a joint duty assignment, becomes the ARFOR commander. Since the preferred joint approach for a JTF headquarters uses an existing Service headquarters, the JTF commander and headquarters would retain all responsibilities associated with both command positions (ARFOR and JTF). This can overload the JTF headquarters unless the commander delegates authority for Service-specific matters to another commander. For example, when a corps becomes a JTF headquarters, the corps commander becomes the JTF commander. The corps retains ARFOR responsibilities through the ASCC back to the Army, unless the corps commander shifts Service responsibilities to another headquarters. The corps commander normally designates a subordinate Army commander and staff as the deputy ARFOR commander for performing those duties. (See JP 1 and JP 3-33.)

1-59. The typical JTF has a combination of Service and functional components. (See figure 1-7, page 1-20.) While the JTF will always have an ARFOR if it commands Army units, the operational roles of the ARFOR can vary. It is important to understand that the ARFOR exercises both OPCON and ADCON over Army forces in the JTF. However, not all Army forces are necessarily OPCON to the ARFOR. The ARFOR commander retains OPCON over Army forces attached to the joint force until the JFC places selected Army units under the command of another component in the JTF. The JFC may designate the senior Army commander and headquarters as the joint force land component command, in which case the Army commander exercises OPCON or TACON over other Service forces, in addition to OPCON and ADCON over Army forces. In this case, dual command responsibilities as ARFOR and joint force land component are manageable, since the preponderance of forces are Army and missions assigned to other land forces are similar in nature.

1-60. The combatant commander detaches Army forces from the theater army and attaches them to a JTF (or another joint force, such as a subunified command). This removes them from the OPCON of the theater army and places them under the OPCON of the gaining JFC (see note). When command transfers to the gaining JTF, the ARFOR in the JTF exercises OPCON over Army forces attached to the JTF until the JFC directs otherwise. The JTF commander organizes the joint force by specifying command relationships (OPCON, TACON, or support) between attached forces. The ARFOR commander retains OPCON over those Army forces not subordinate to another component commander such as a joint special operations component. The ARFOR commander is responsible for all aspects of planning and executing operations as tasked by the JFC.

Note. Attachment has different purposes in joint and Army doctrine. *The combatant commander attaches forces to a JTF in order to transfer OPCON. The Army attaches forces to transfer both OPCON and ADCON.* Therefore, when the combatant commander attaches an Army unit to a JTF, it is automatically attached to the ARFOR unless the JFC specifies otherwise. The ARFOR then exercises OPCON and ADCON over the Army unit.

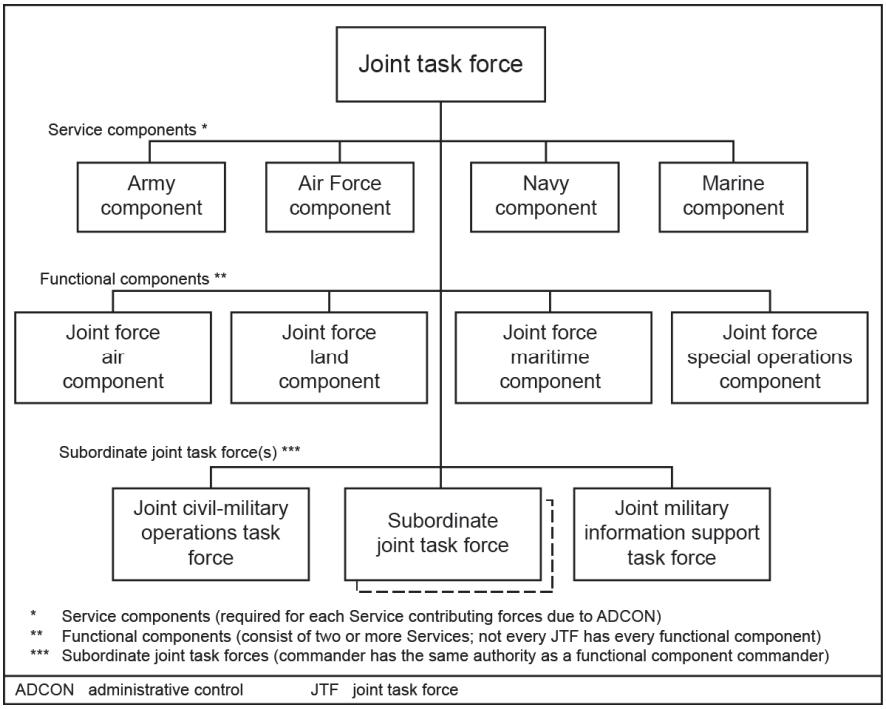

Figure 1-7. Possible joint task force components

1-61. In addition to controlling Army forces, the ARFOR coordinates ASOS. ASOS includes provision of common-user logistics and executive agent support to the JTF as required the JTF establishing authority. To make this coordination more manageable, the theater army normally retains command of logistics and medical support units that are not part of the brigades. These units provide area support not only to the Army forces but also to the joint force. The ARFOR headquarters manages support to other Services including, but not limited to:

- Missile defense.
- Fire support.
- Base defense.
- Transportation.
- Fuel distribution.
- General engineering.
- Intratheater medical evacuation.
- Veterinary services.
- Logistics management.
- Communications.
- Chemical, biological, radiological, and nuclear defense.
- Consequence management capability.
- Explosive ordnance disposal.

1-62. As required by the theater army, the ARFOR commander exercises ADCON over all Army forces in the JTF, including those subordinate to other components. Depending on the JTF organization, the ARFOR commander may exercise OPCON of some or all Army forces assigned to the task force, and remain responsible for ADCON of those forces. However, the exercise of OPCON is a delegation of joint command authority and not a function of ADCON.

1-63. The theater army commander will specify the ADCON responsibilities of the ARFOR, with the theater army normally retaining control of RSOI, logistics support of the deployed force, personnel support,

and medical support. Administrative responsibilities normally retained by the ARFOR include internal administration and discipline, training within the joint operations area, and Service-specific reporting. The theater army normally retains OPCON of Army sustainment and medical commands operating in the joint operations area. The theater army commander establishes an Army support relationship between the ARFOR and these units. (See chapter 2 for further details.)

ARFOR RESPONSIBILITIES

1-64. A division or corps headquarters serving as the ARFOR for a JTF includes the headquarters controlling multiple subordinate tactical formations and the Army forces placed under a joint or multinational headquarters. The Army commander is responsible to the JFC for these operational requirements. However, the JFC is not responsible for Service-specific matters involving administration and support of Army forces. The Army forces commander answers to the Secretary of the Army through the ASCC for Service-specific matters, whether it is a theater army or functional command (for example, SDDC of the USTRANSCOM). A theater army provides ADCON or Title 10 authorities and responsibilities for all Army units within the JTF, including those not under OPCON of the headquarters. In certain circumstances, such as geographic separation between the ADCON headquarters and the intermediate tactical headquarters, the theater army commander can delegate authority to execute specified administrative tasks to Army component commanders under OPCON of JFCs operating in joint operations areas within an area of operations.

1-65. The ARFOR within a joint operations area normally exercises OPCON over all Army maneuver, fires, and maneuver support forces (such as military police, air and missile defense, engineer, civil affairs, and CBRN), except for Army forces providing sustainment (including medical support). The ARFOR in a joint operations area identifies requirements, establishes priorities of support for Army forces, and coordinates with the theater army for providing sustainment. The ASCC may itself function as an ARFOR unless the combatant commander exercises command and control through subordinate JFCs. In this case, each subordinate JFC potentially has subordinate Army forces, while the ASCC exercises ADCON of all Army forces across the AOR. The ASCC provides ASOS, common-user logistics, assignment eligibility and availability, and sustainment to interagency elements and Army, joint, and multinational forces in a joint operations area.

1-66. This relationship relieves division or corps headquarters (as ARFOR within the joint operations area) of responsibility for directly exercising ADCON and sustaining tasks for Army forces and providing ASOS, common-user logistics, and Army executive agent responsibilities. The sustainment concept splits the responsibilities between the ARFOR in the joint operations area or the joint force command (division or corps) and the theater army. The theater army provides sustainment to all Army forces stationed in, transiting through, or operating within the area of operations. It also provides most ASOS, common-user logistics, and Army executive agent support to unified action partners within the area of operations. The theater army executes these sustainment responsibilities through its assigned theater sustainment command (TSC) with expeditionary sustainment commands (ESCs) and tailored sustainment brigades provided from the Army pool of Service-retained rotational forces. The theater army provides medical services to support the force through its assigned medical command (deployment support) (MEDCOM [DS]) and forward deployed medical brigades. (See FM 4-02.)

Army executive agent responsibilities. Under the authority of the Secretary of Defense and Title 10, U.S. Code, the Army has been designated the executive agent by the Secretary of Defense or Deputy Secretary of Defense for foundational activities that are not necessarily landpower equities, but functions necessary to the entire joint force. These functions include, but are not limited to—

- DOD Detainee Operations Policy.
- Armed Services Blood Program Office.
- Chemical and Biological Defense Program.
- Chemical Demilitarization.
- DOD Combat Feeding Research and Engineering Program.
- Defense Language Institute Foreign Language Center.
- DOD Level III Corrections.
- Explosives Safety Management.

1-67. For each of the combatant commands, the Secretary of Defense has assigned administrative and logistics support for subordinate joint elements to one of the four military services. The Department of the Army delegates its assigned CCSA responsibilities to the respective theater army (or in the case of Korea,

to the Eighth Army) for that geographic combatant command. U.S. Army South conducts CCSA for USSOUTHCOM and USSOCOM South. U.S. Army Europe conducts CCSA for USEUCOM, U.S. Special Operations Command Europe, USAFRICOM, and U.S. Special Operations Command Africa. Eighth Army conducts CCSA for U.S. Joint Forces Korea and U.S. Special Operations Command Korea. USASOC conducts CCSA for Joint Special Operations Command. (See DODD 5100.03.)

ARMY LOGISTICS AND MEDICAL SUPPORT

1-68. The logistics concept of support, and its counterpart in the medical concept of support, affects the command and support relationships among the theater army, the ARFOR (a division or corps headquarters), and the logistics and medical units supporting Army and joint forces conducting operations in a joint operations area. Under the logistics and medical support concepts, the logistics and medical units above brigade level maintain a command relationship with their parent logistics and medical commands and have a support relationship with the ARFOR in the joint operations area. The objectives of the logistics and medical support concepts are to maximize the efficiency, effectiveness, and flexibility of logistics and medical support provided to Army and joint forces operating in a joint operations area. Sustainment provided by the ESC and medical brigade (support) relieves the ARFOR of most of the responsibilities for sustainment, including ASOS, common-user logistics, and some executive agent functions. This allows the ARFOR to focus on the operational maneuver, maneuver support, and fires tasks of land operations while the logistics and medical commands provide tailored support to the Army and joint forces. The logistics and medical units deployed within the joint operations area are normally in direct support of the ARFOR and provide general support to joint and multinational forces on an area basis.

LOGISTICS CONCEPT OF SUPPORT

1-69. The purpose of sustaining operations is to generate and maintain combat power. Logistics operations enable both shaping and decisive operations by extending operational reach and enabling commanders to mass effects and maintain freedom of action. A structure that provides unity of command from a strategic level to tactical level is critical to the success of sustaining operations. This applies equally to both logistics and medical operations in support of Army and joint forces.

1-70. Sustainment of landpower requires an uninterrupted link between the strategic, operational, and tactical levels. It requires close coordination and collaboration with other Services, allies, host nations, and other governmental and nongovernmental organizations. The sustainment command headquarters serves as the link necessary to extend operational reach, endurance, and freedom of action that are essential for success of unified land operations. Sustainment planning and execution must establish command and support relationships at the operational and tactical levels and across joint and Army forces.

1-71. The TSC is the senior Army logistics headquarters in the theater. It plans, coordinates, and resources all Army or lead service logistics requirements, prioritizes requirements, and synchronizes distribution throughout the theater. Integral to the TSC success is its ability to leverage and synchronize support from joint and strategic partners (such as, the USTRANSCOM, the Defense Logistics Agency, the Air Mobility Command, the General Services Administration, and the U.S. Army Materiel Command). The TSC is part of an integrated network that links to both the joint and Army logistics networks for logistics focus and command functions.

1-72. Sustainment commanders and staffs (logisticians, medical, and personnel services) develop theater concept of support plans that ensure Army forces are sustained throughout all phases of an operation. These plans are developed in close coordination with the theater army and the combatant commander to ensure that all forces can be sustained in accordance with the joint commander's priorities. Sustainment resides in the TSC, ESC, MEDCOM (DS), sustainment brigades, and combat sustainment support battalion (CSSB) headquarters. At echelons above brigade, functional sustainment units execute sustaining operations. These units are specialized to perform unique sustainment capabilities primarily on a general support relationship. At each echelon, information management systems capture sustainment requirements to produce a theater sustainment common operational picture, allowing sustainment commanders to manage and prioritize supply stocks, distribution assets, and medical assets. The sustainment command relationship is designed to maximize sustainment efficiencies and provide effective medical, materiel, and distribution management throughout the entire theater of operations.

1-73. Centralized logistics command means that staffs plan and coordinate theater logistics at the TSC and ESC levels. The execution of logistics is decentralized, performed by the sustainment brigade and support battalions within each brigade. The concept of centralized logistics command supports the theater army commander by ensuring continuity of logistics support to land operations across the theater. Centralized logistics requires continuous coordination, maintaining a common operation picture, and supported and supporting commanders who focus on understanding each other's capabilities and intents.

1-74. Centralized control of logistics maximizes three main responsibilities with which the TSC and ESC are charged: theater opening, theater distribution, and theater sustainment. Materiel and distribution management are critical to ensure that these responsibilities are executed efficiently and in accordance with the commander's intent and priorities. Within the logistics chain of command, the S-4, G-4, or J-4 staff and support operations offices at each sustainment level ensure a seamless coordination effort to synchronize materiel and distribution management.

1-75. The primary staff for logistics within an operational headquarters is the S-4, G-4, or J-4. The S-4, G-4, or J-4 develops, coordinates, and monitors plans, policies, procedures, and programs for supply, transportation, maintenance, field services, and facilities for the command's subordinate units. This staff determines logistics requirements for subordinate units, monitors the logistics posture of subordinate units, and establishes support priorities in accordance with the commander's priorities and intent. This staff section provides supervision of all classes of supply operations as well as monitors and analyzes subordinate unit equipment and supply readiness status. The S-4, G-4, or J-4 identifies systematic sustainment problems, provides solutions to fix sustainment problems, and then makes recommendations for provisions of adequate sustainment force structure to mitigate those problems. The S-4, G-4, or J-4 is also responsible for planning and management of fixed facilities and coordination of construction, utilities, and real estate for the command.

1-76. In conjunction with the theater army G-3, the G-4—who maintains oversight of Army unit equipment readiness in the theater—develops plans for cross-leveling equipment to meet changing operational requirements. Cross-leveling of materiel is communicated to the TSC and ESC so that U.S. Army Materiel Command—responsible for the management and accountability of equipment replacement stocks—can meet strategic and operational stockage objectives. During theater drawdown and retrograde of equipment, the theater army G-4 (in coordination with the TSC and U.S. Army Materiel Command) monitors equipment disposition and drawdown activities to ensure Army equipment is processed out of the theater properly.

1-77. The support operations staff is a unique primary staff position found in logistics organizations. Unlike the S-4, G-4, or J-4, the support operations staff focuses on the logistics mission of providing support to customer units. The support operations staff is responsible for providing logistics support to supported organizations in accordance with the logistics plan. It does detailed planning support for deployment and the Army portion of the theater distribution system. This staff section manages supply, maintenance, hazardous waste management, field services, transportation, and movement control activities associated with support to the force. It integrates transportation and movement of units, supplies, and materiel into, within, and out of theater. It provides this support through a distribution management center.

1-78. The TSC and ESC distribution management centers consist of seven subordinate branches: distribution integration, supply, material readiness, munitions, mobility, logistics automation, and operational contract support. Based on mission variables, medical supply and support to Army special operations forces (ARSOF) may be included. These branches serve as the central logistics management cell linking operational sustainment to strategic sustaining operations.

1-79. Normally the TSC is assigned to the theater army. Forces allocated to the TSC (ESC, sustainment brigades, battalions, and companies) are normally attached. In almost all instances, companies and battalions will be further attached to a sustainment brigade headquarters. The TSC organizes forces, establishes command relationships and priorities of support, and allocates resources as necessary to support mission requirements.

1-80. The subordinate units of the TSC that deploy into a joint operations area (an ESC with subordinate sustainment brigades, for example) normally have a support relationship with the corps or division headquarters serving as the ARFOR. As required by the JFC, the sustainment command will also support

joint forces. The specific support relationship depends on several factors. If the mission of the ARFOR requires extensive maneuver by brigades and divisions, then the sustainment command normally provides direct support to the ARFOR based on ARFOR commander's priorities. In campaigns dominated by stability tasks where brigade-sized maneuvers are uncommon, the sustainment command normally is in general support to the ARFOR and provides sustainment according to the JFC's priorities and coordination with the theater army and TSC. Subordinate units of the ARFOR normally receive support on an area basis. If the JFC establishes a joint functional logistics command and designates the ESC as the logistics headquarters, then the ESC provides general support to the ARFOR.

1-81. Under certain conditions, the corps or division may require TACON or OPCON of deployed sustainment units. The JFC could also exercise OPCON of Army sustainment units directly. Regardless of the command or support relationship to headquarters in the joint operations area, the TSC retains ADCON of Army logistics units and maintains situational awareness through command reporting enabled by automated logistics control systems and other mechanisms established by the theater army. (For detailed information on the TSC and ESCs, refer to ATP 4-94.)

MEDICAL CONCEPT OF SUPPORT

1-82. The medical concept of support uses a single medical chain of command and the provision of medical support on an area basis.

Centralized Medical Chain of Command

1-83. Like a single logistics structure, a centralized medical structure that provides unity of command from strategic to tactical levels results from a need to fuse multiple capabilities together to achieve JFC campaign objectives. A centralized medical chain of command enables medical commanders to meet the requirements of dynamic operations. This allows medical commanders in the single chain of command to identify and specify the need to re-route medical assets within the joint operations area and AOR. The centralized medical chain of command enables the medical commander to effectively plan and execute theater-wide (AOR) distribution of medical support between multiple joint operations areas.

1-84. The MEDCOM (DS) is the senior Army medical headquarters in an AOR. A MEDCOM (DS) is normally assigned to the theater army and serves as the medical force provider within the AOR. The MEDCOM (DS) executes its responsibility to provide health services through forward deployed medical brigades. Medical brigades are normally in direct support of the ARFOR and provide general support on an area basis to joint and multinational forces as well as governmental and nongovernmental organizations. Under certain conditions, a medical brigade may be attached or placed under OPCON to an Army division or corps headquarters (as ARFOR), but this limits the senior medical commander's ability to rapidly task-organize and reallocate resources across the AOR. Thus, all Army health service units maintain a command relationship with a medical chain of command from the medical battalion (multifunctional) through the medical brigade (support) to the MEDCOM (DS). (See FM 4-02.)

Provision of Medical Support on an Area Basis

1-85. Like logistics support, medical elements (medical brigades or medical battalions [multifunctional]) provide support on an area basis. Medical battalions (multifunctional) that provide Army health services to the force are task-organized to a medical brigade and assigned an area of support. Medical brigades (support) or medical battalions (multifunctional) provide support to designated Army, joint, and multinational forces as well as governmental and nongovernmental organizations within that assigned area of support.

OVERLAPPING OPERATIONAL AND ADMINISTRATIVE CHAINS

1-86. At echelons above brigade, the operational and administrative chains of command intertwine. The operational chain of command extends downward from the combatant commander through the JFC to Service and functional components within a subordinate joint command. ADCON of Army forces extends downward from the theater army through the ARFOR and from there through task-organized Army units. The ARFOR will have OPCON over many Army units, but not necessarily all. The ARFOR will exercise

ADCON over all Army units, but the theater army will retain ADCON for selected tasks or Army units. For example, an Army corps headquarters may become a joint force land component within a JTF. (See figure 1-8.) The corps commander exercises OPCON automatically over the attached Army divisions and the maneuver enhancement brigade (MEB). The corps has TACON of a Marine expeditionary brigade. The corps commander has placed an Army engineer battalion under the TACON of the Marine Corps commander. The JFC has placed an air defense brigade in direct support of the joint force air component commander (JFACC), who is also the area air defense commander (AADC). The JFC has organized a joint special operations task force and attached an Army special forces unit and a Ranger unit to it. Therefore, the joint special operations task force has OPCON of these Army forces. As the senior Army commander, the corps commander exercises ADCON over the Army units distributed across the JTF. This ensures that Service responsibilities are fulfilled while giving the JFC maximum flexibility for employing the joint force. Unless modified by the Secretary of the Army or the theater army commander, Service responsibilities continue through the ARFOR to the respective Army commanders.

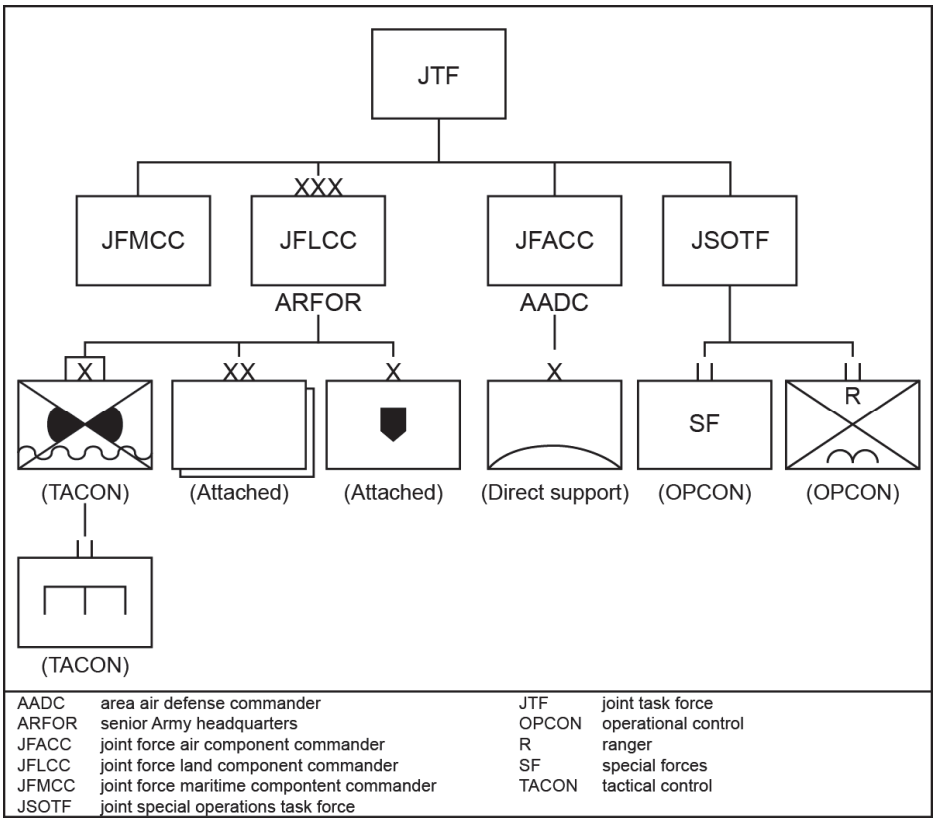

Figure 1-8. Overlapping chains of authority

1-87. In some limited contingency operations, the JFC may elect to employ Marine Corps and Army forces as Service components, instead of creating a functional joint force land component. In that case, the ARFOR and Marine Corps forces would exercise OPCON over their respective Service forces as well as ADCON. This arrangement may occur in a forcible entry operation due to the complexity of parachute, air, and amphibious operations and limited time available for joint integration. As soon as the joint operations area matures with the arrival of follow-on forces and headquarters, the JFC may establish a joint force land component command.

1-88. Figure 1-9 on page 1-26 illustrates another case. If Army forces are the only conventional forces attached to a JTF, the JFC may fight with the ARFOR serving as both the Service and operational-level land component of that task force. Note that because the ARFOR does not control other Service forces, it is not a joint force land component command. It functions as a co-equal component to the functional components—JFACC, joint force maritime component commander, and joint force special operations

component commander within the JTF. As the joint force land component, the ARFOR employs landpower to accomplish the objectives of the campaign. Its focus is at the operational level. As the Service component, the ARFOR has ADCON over the all the Army units attached to the JTF. It does not have OPCON over all the Army units in this example. The air and missile defense brigade provides direct support to the JFACC because the JFACC is also the AADC.

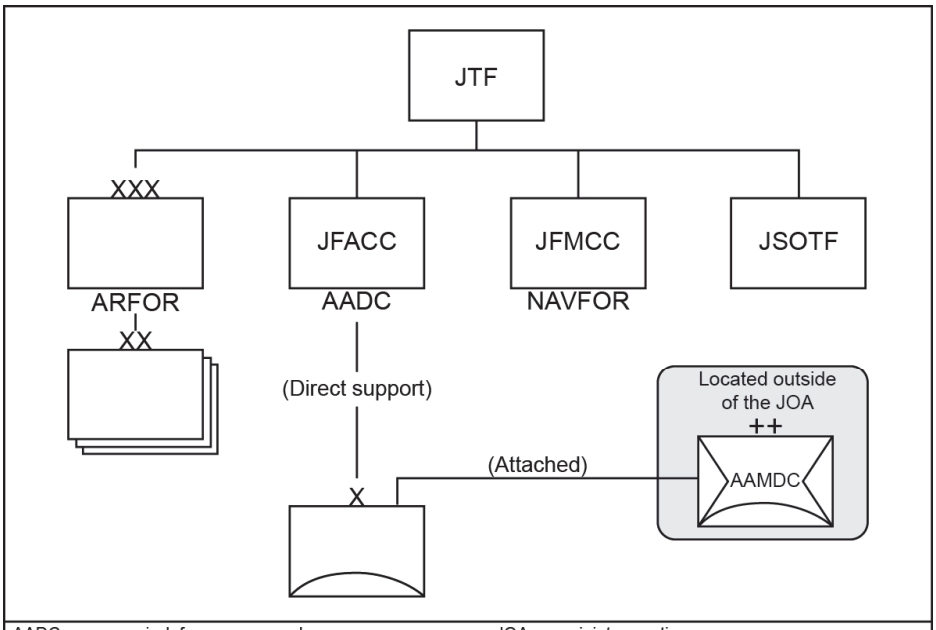

AADC	area air defense commander	JOA	joint operations area
AAMDC	US Army Air and Missile Defense Command	JSOTF	joint special operations task force
ARFOR	senior Army headquarters	JTF	joint task force
JFACC	joint force air component commander	NAVFOR	Navy forces
JFMCC	joint force maritime compontent commander		

Figure 1-9. Joint task force organized by Service and functional components

1-89. Multinational operations may also complicate the chain of command. In general, multinational forces will operate under the TACON of a U.S. headquarters. However, the National Command Authority of the multinational force may impose constraints and restraints on the use of their forces. Army forces may operate under the TACON or in direct support of a multinational headquarters but remain subject to U.S. command. The ARFOR retains ADCON over all Army units under multinational command. The ARFOR and its supporting sustainment command will often provide support to multinational forces within a coalition. The combatant commander normally provides a formal agreement negotiated between the supported multinational force and the U.S. joint force based on agreements concluded at the national level.

1-90. Although nations will often participate in multinational operations, they rarely relinquish national command of their forces. As such, forces participating in a multinational operation will have at least two distinct chains of command: a national chain of command and a multinational chain of command. As Commander in Chief, the President retains and cannot relinquish national command over U.S. forces. Command authority for a multinational force commander is normally negotiated between the participating nations and can vary from nation to nation. U.S. Army forces can operate under the TACON of, or in direct support to, a multinational headquarters but remain subject to U.S. command. The ARFOR retains ADCON over all Army units under multinational command. The ARFOR and its associated sustainment command often provide support to multinational forces. The combatant commander normally provides a formal agreement negotiated between the multinational forces and the U.S. forces, based on agreements concluded at the national level. (For more information, refer to JP 3-16.)

OPERATIONAL AREAS

1-91. This manual refers throughout to a hierarchy of operational areas. Within the AOR, the combatant commander exercises COCOM over assigned forces. All U.S. forces within the AOR (assigned, attached, OPCON, or in transit through the region) fall under the control of that geographic combatant command for as long as they remain in the AOR. The theater army commander exercises OPCON and ADCON for all Army forces within the AOR, except for Army forces in transit.

1-92. The combatant commander establishes subordinate joint commands, normally a JTF. The combatant commander assigns the JTF a joint operations area that encompasses the three dimensional volume of sea, land, and air within which the JTF will operate. Areas of operations are defined by the JFC for surface (land and maritime) forces. The JFC may specify an area for SOF, designated as a joint special operations area.

1-93. An area of operations assigned to the joint force land component does not typically encompass the entire operational area of the JFC, but it should be large enough for the JFLCC to accomplish the mission and protect the forces or capabilities provided. The JFLCC establishes an operational framework for the area of operations that assigns responsibilities to subordinate land commanders and maximizes the operational capabilities of all subordinate elements. Within the area of operations designated by the JFC, the JFLCC (or ARFOR commander) is the supported commander. Within the designated area of operations, the JFLCC (or ARFOR commander) integrates and synchronizes maneuver, fires, and interdiction. To facilitate this integration and synchronization, such commanders have the authority to designate target priority, effects, and timing of fires within their area of operations (see figure 1-10).

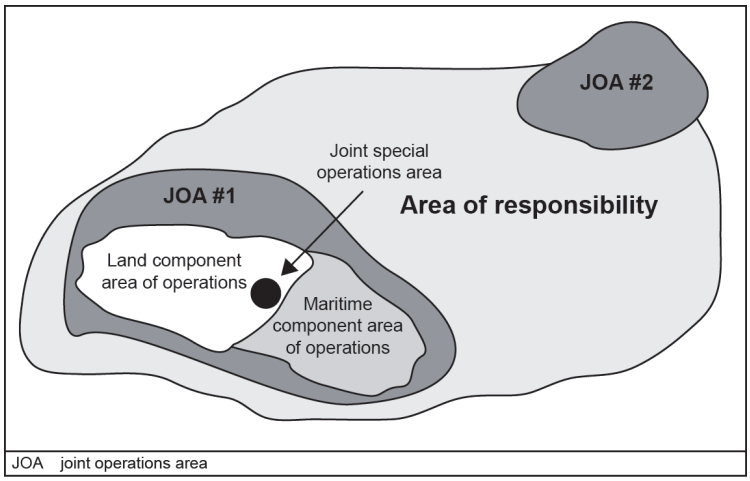

Figure 1-10. The area of responsibility and joint operations areas

1-94. Synchronization of efforts within land area of operations with joint operations in the joint operations area is of particular importance. To facilitate synchronization, the JFC establishes priorities for all forces within the joint operations area, including land forces. The JFACC is normally the supported commander for the JFC's overall air interdiction effort, while land and maritime component commanders are supported commanders for interdiction in their area of operations.

1-95. In coordination with the JFLCC, those commanders designated by the JFC to execute AOR- and/or joint operations area-wide functions have the latitude to plan and execute these JFC prioritized operations within the land area of operations. Any commander accomplishing such a mission within a land area of operations must coordinate the operation to avoid adverse effects and fratricide. If those operations can adversely impact the land area of operations, the commander assigned to execute the joint operations area-wide functions must re-adjust the plan, solve the problem with the JFLCC, or consult with the JFC for resolution.

This page intentionally left blank.

Chapter 2
The Theater Army

ARMY SERVICE COMPONENT COMMAND

2-1. The theater army enables the combatant commander to employ landpower anywhere in the AOR across the range of military operations. It commands all Army forces in the region until the combatant commander attaches selected Army forces to a JFC. When that happens, the theater army divides its responsibilities between the Army component in the joint operations area (the ARFOR) and Army forces operating in other parts of the AOR. Each theater army supports the Army strategic roles—prevent, shape, and win—and facilitates the use of landpower in JTFs. The theater army is deeply involved in security cooperation across the region. The theater army is organized, manned, and equipped to be the ASCC for that geographic combatant command. It has limited capabilities to perform two other roles—JTF headquarters for a limited contingency operation and joint force land component command for a limited contingency operation.

2-2. The primary role of the theater army is that of the ASCC to that GCC. Title 10 establishes this in law; it is reiterated in DODD 5100.01. The combatant commander exercises COCOM over all Army forces assigned or attached to the command. Army forces under COCOM are attached to the theater army. Under COCOM, the theater army exercises OPCON of Army forces until the combatant commander attaches Army forces to a subordinate JFC, typically a JTF commander. For example, the Secretary of Defense assigns (or attaches) an Army division headquarters and subordinate BCTs to USPACOM. Because the DOD assigns them to the GCC, the division and its subordinate brigades attach automatically to the USARPAC, the theater army. USARPAC exercises OPCON and ADCON over the division and brigades. If the combatant commander creates a JTF and subordinates the division and BCTs to the JTF, then OPCON of the division transfers from USARPAC to the JTF commander. However, ADCON and support requirements remain the responsibility the theater army.

2-3. The theater army commander remains responsible to the Department of the Army for Service-specific requirements. This falls under the ADCON chain of authority. This authority establishes a hierarchy for Army support to deployed forces without modifying the operational chain of command that runs from the combatant commander through subordinate JFCs. For example, theater army commanders establish centers in the AOR to train individual replacements; complete collective training, theater orientation, and theater acclimation; and manage force modernization of Army forces before their employment by the JFC in the joint operations area.

2-4. DODD 5100.01 identifies the responsibilities of the military departments. The generating force and operating forces of the Army divide responsibility for carrying out these functions. Figure 2-1 on page 2-2 illustrates the Service responsibilities inherent with ADCON.

2-5. The theater army and theater-level commands shift execution of much of the Service-specific functions from the ARFOR, the senior Army echelon in a JTF, to the theater army. This shift allows the corps or division commander to exercise flexible mission command over tactical units and permits the ARFOR staffs to focus on their operational missions.

ARMY SUPPORT TO OTHER SERVICES

2-6. In all joint operations, sustainment is a Service responsibility except as specified by DOD CCSA directives, combatant commanders' lead Service designations, or inter-Service support agreements. Each Service retains its responsibility for sustainment. Combatant commanders direct theater army commanders to provide common-user logistics and ASOS, agencies, or multinational forces, as required. However, shared sustainment responsibility or common-user logistics is more effective, especially for joint operations. Title 10 authorizes combatant commanders to assign common-user logistics responsibilities that

overlap the military department's prescribed functions. Additionally, directive authority for logistics is the additional authority used by combatant commanders to eliminate duplicated or overlapped sustainment responsibilities. The theater army coordinates with the combatant command staff to determine joint sustainment requirements, identify responsibilities, and enable commanders to exercise mission command for sustainment. Theater army commanders focus on operational-level theater support involving force generation and sustainment during campaigns and joint operations. They match sustainment requirements for a campaign to the Army forces' capabilities. Combatant commanders may designate a Service component as either the temporary common-user logistics lead or long-term, single integrated theater logistics manager if required. (See ADRP 4-0 for more information.)

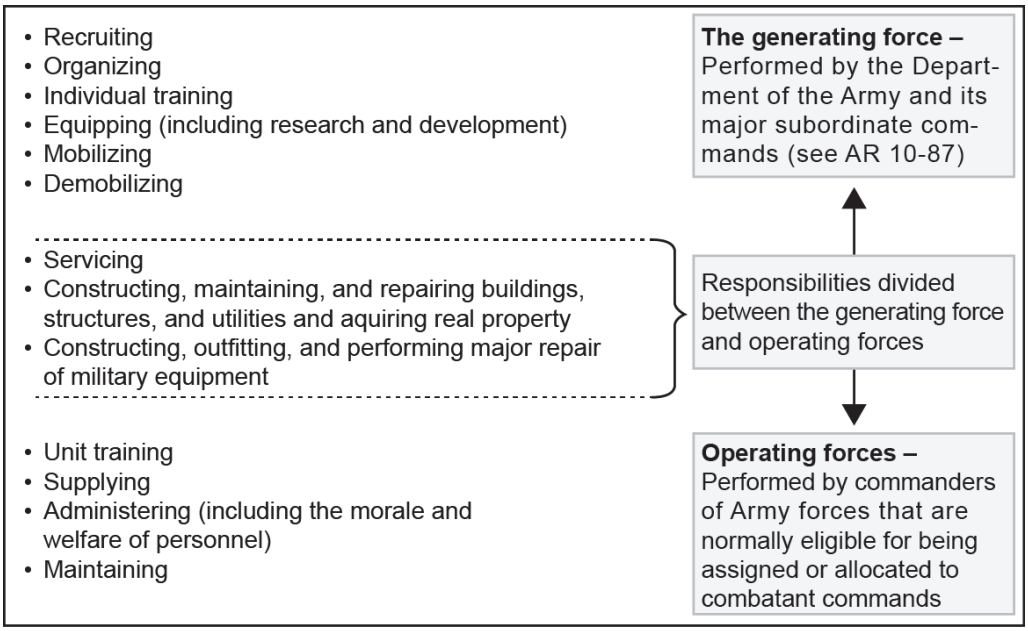

Figure 2-1. Service-specific responsibilities

PROTECTION

2-7. The Unified Command Plan directs force protection responsibility for all Title 10 DOD forces stationed in, operating in, residing in, or transiting an AOR to the GCC. In support of the GCC, this responsibility falls on the theater army commander for all Title 10 Army forces in the AOR. Since there is no Army theater-level protection command, staff responsibility for planning and oversight falls entirely on the theater army staff. If a JFLCC or joint security coordinator is required, the GCC normally assigns that responsibility to the theater army commander. The tasks of the theater army include the exercise of TACON over Title 10 Army forces stationed in, operating in, residing in, or transiting the AOR.

2-8. In addition to assets that provide protection, such as CBRN and explosive ordnance disposal (EOD) units, the theater army staff focuses on two enablers of protection: mission command and sustainment. The theater requirements for air and missile defense, for example, often exceed the capabilities available. As the force is tailored, the theater army staff coordinates with the GCC and is supported by the GCC's aligned air and missile defense command. The staff estimates the mission command and sustainment assets necessary for both the campaign and an increased threat across the AOR. The staff also requests forces to meet the combatant commander's priorities. This planning necessarily involves coordination with multiple host-nation militaries and the Department of State. Through careful planning, the theater army develops an air and missile defense task force package consisting of sustainment assets, security forces, and headquarters for deployment to partner nations outside the joint operations area. ADCON of these distributed task forces becomes a challenge, and the theater army may require additional staff and earlier deployment of its air and missile defense command in order to fulfill its ADCON requirements.

2-9. If the JFC elects to establish a joint security area (JSA) within the joint operations area, the ARFOR normally determines its structure and its controlling headquarters. The options for the JSA depend on the threat and the mission variables, particularly forces available. If the threat to the JSA is low to moderate, the theater army commander may tailor the ARFOR with a MEB specifically for controlling the JSA. The MEB may include additional military police (MP) and intelligence assets. If the threat to theater bases and lines of communications is significant, the theater army may tailor the ARFOR with an additional BCT to control that area of operations, and the supported commander in the JSA for protection. A third option, in the case of very high threat levels, is to assign the mission to an Army division with BCTs and one or more MEBs. (See ADRP 3-37.)

UNIFIED ACTION IN THE GEOGRAPHIC COMBATANT COMMAND

2-10. The Army provides each GCC with an assigned theater army headquarters with capabilities matched to that AOR. The theater army and its theater-assigned Army forces support the combatant commander's theater engagement plans and security cooperation. The theater army and its theater-assigned Army forces set the theater and the joint operations area for the employment of landpower in contingencies and campaigns. The theater army's contingency command post also provides the combatant commander with command and control capabilities for immediate crisis response, assessment, and initial control of operations. The theater army anticipates, plans, requests, receives, trains, sustains, and supports redeployment of landpower within each geographic combatant command. In short, the theater army provides and sustains the landpower in the AOR.

KEY TASKS AND LIMITATIONS

2-11. The theater army has operational and administrative tasks. Its operational focus is to plan for, tailor, and control Army forces in that geographic combatant command. Its other purpose is to execute the Service responsibilities specified in Title 10 and DODD 5100.01.

2-12. The tasks of the theater army include the following:

- Exercise ADCON over all Army forces in the AOR to include sustainment of all Army forces.
- Exercise OPCON over all Army forces not attached or under OPCON to a subordinate JFC within that geographic combatant command.
- Provide Army support to theater security cooperation and theater engagement plans.
- Anticipate requirements and develop plans for the employment of Army forces in limited contingency operations, crisis response, major operations, and campaigns.
- Set conditions in the theater for the employment of landpower; set the theater.
- Serve as the joint force land component command for military engagement, security cooperation, and deterrence across the entire AOR when designated by the combatant commander.
- Coordinate with Department of the Army, Army commands, and supporting ASCCs for additional Army forces and tailor them for the combatant commander.
- Control RSOI of Army forces deploying to the AOR.
- Provide ASOS and SOF including lead agent, common-user logistics, and CCSA requirements.
- Provide Army estimates and plans as well as advice to the GCC and to the Department of the Army for the required exercises, engagements, and other activities in support of theater security cooperation plans.
- Support other government agencies as directed by the combatant commander.
- Provide sustainment and other directed support to multinational forces as required by the combatant commander.
- Provide a JFC and command post for limited contingency operations.
- Manage close and continual coordination with the Reserve Component in support of the ASCC headquarters.
- Exercise TACON (for force protection) over all Regular Army forces stationed in, operating in, residing in, or transiting the AOR. (This does not apply to Army National Guard forces under state or territorial command.)

2-13. The limitations of the theater army headquarters include the following:

- The theater army is not designed, organized, or equipped to function as a combined forces land component command or a field army in major combat operations. It does not exercise OPCON over corps and larger formations.
- The main command post operates from a fixed location and is not mobile.
- The main command post can provide personnel for a multinational land component headquarters, but this degrades the ability of the headquarters to provide and control theater-level support across the area of operations.
- The contingency command post requires joint augmentation for employment as a JTF headquarters. With augmentation, it can become a JTF for limited contingency operations. Although the contingency command post is deployable, it has limited endurance without reinforcement and additional security.
- Some of the theater-level capabilities required for campaigns and major operations must deploy from the continental United States (CONUS).
- Augmentation for both a JTF and for theater-level capabilities is frequently provided by forces mobilized from the United States Army Reserve and Army National Guard.
- Most theater-level capabilities required for campaigns and major operations are in the Reserve Component and must be mobilized and deploy from the CONUS.

LANDPOWER FOR THE GEOGRAPHIC COMBATANT COMMANDS

2-14. The strategic environment requires landpower to prevent, shape, and win. This requirement falls first on the theater army. Army forces, in support of the combatant commander, work with partner nations to set the conditions to prevent conflict as well as ensure the theater is prepared to execute contingency plans. Strategically, the Army meets the demands for landpower from geographic combatant commands. Today, most of this landpower comes through rotational units instead of forward stationed forces. Therefore, the theater armies coordinate closely with the various Army commands and direct reporting units for infrastructure, deployment and distribution operations, and in-theater support requirements. The CONUS along with its territories and possessions constitute a unique and special AOR, with legally distinct National Guard operations at the state level and multi-component federal military support when authorized by the President. The Army National Guard provides the majority of military forces for state-level response and for defense support of civil authorities (DSCA).

REGIONALLY ALIGNED FORCES CONCEPT

2-15. In support of the geographic combatant commands' campaign plans, the Department of the Army, in conjunction with FORSCOM, identifies regionally aligned forces to prevent, shape, and win in each AOR. These forces maintain proficiency in the fundamentals of decisive action, but also possess particular capabilities tailored for one or more of the missions specified for a geographic combatant command. Regionally aligned forces provide the combatant commander with an Army headquarters tailored to that mission, from tactical level to JTF-capable. These forces include Army units assigned to combatant commands, units allocated to a combatant command, and units retained by the Service, aligned with a combatant command, and prepared by the Army for regional missions. Regionally aligned forces complement Army organizations and capabilities that are forward-stationed; complement those already operating in an AOR; or support that combatant commander from outside the AOR. The latter extends to those organizations providing reachback support and prepared-to-deploy forces into the AOR.

2-16. Combatant command requirements drive regional missions. These missions require the Army to develop an understanding of the cultures, geography, languages, and militaries of the countries to where Soldiers are most likely to be employed, as well as expertise in imparting military knowledge and skills to others. This approach requires the Army to adapt forces from the lowest levels by emphasizing leader development and leveraging technology to empower the force. Each theater army has a supporting theater intelligence brigade, which enables regionally aligned forces and global response force units to connect to the combatant command's intelligence architecture for enhanced situational understanding. Figure 2-2 illustrates the theater army's role in requesting regionally aligned forces.

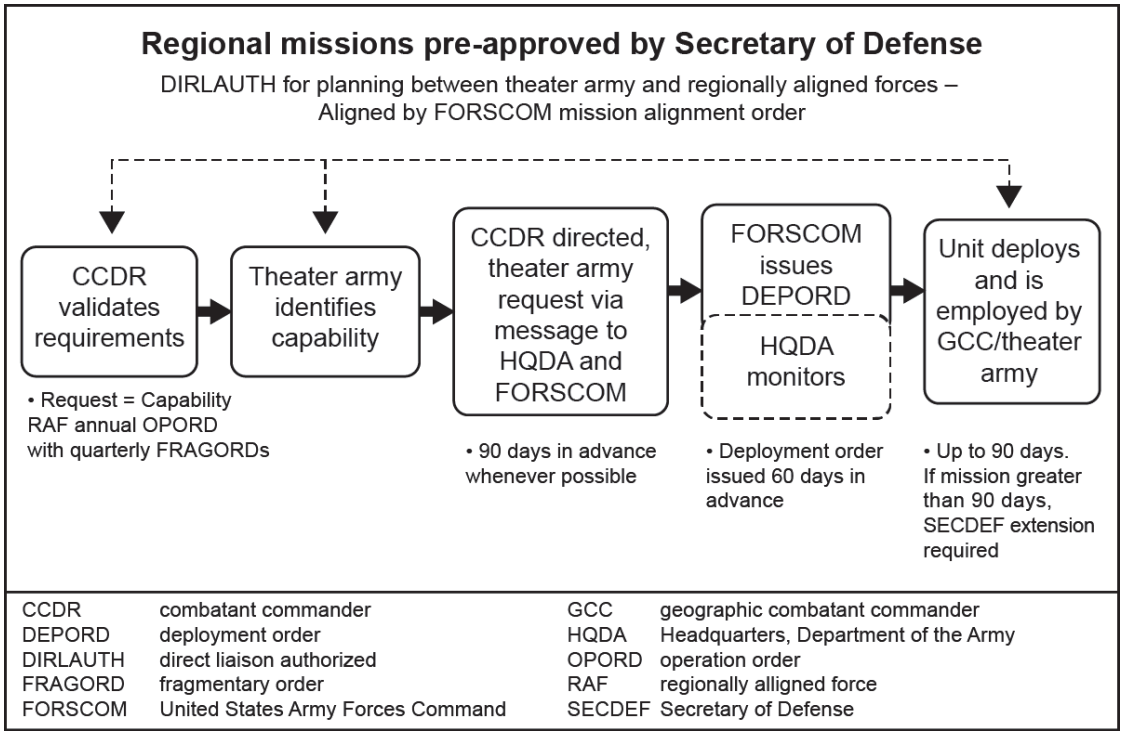

Figure 2-2. Theater army's role in requesting regionally aligned forces

THE THEATER ARMY AND CAMPAIGNS

2-17. A better understanding of the theater army's responsibilities develops when examined in the context of the joint phases. The theater army enables the Army to accomplish the strategic roles identified in ADP 1: prevent, shape, and win. The joint phasing model uses six phases—shape, deter, seize the initiative, dominate, stabilize, and enable civil authority. At the conclusion of the sixth phase, the cycle resets to phase zero—shape—within a new equilibrium across the AOR. The theater army plays a key part in the conduct of campaigns and major operations, illustrated in figure 2-3 on page 2-6.

THEATER ARMY ACROSS PHASES

2-18. The actions of the theater army across phases are examined in more detail in paragraph 2-19 through paragraph 2-27. Chapter 3 discusses theater army subordinate units that support deployed forces.

Steady State Activities and Phase Zero—Shape

2-19. The shape phase includes missions, tasks, and actions that deter adversaries and assure friends, as well as establish conditions for possible contingencies. Security cooperation is the predominant activity. Shape activities are continuous. The combatant commander uses them to improve security within partner nations, enhance international legitimacy, and gain multinational cooperation. This cooperation includes information exchange and intelligence sharing, obtaining access for U.S. forces in peacetime and crisis, and mitigating conditions that could lead to a crisis. The theater army integrates landpower within theater engagement plans and security cooperation activities. Integrating landpower requires the theater army to train and prepare assigned forces for operations as well as to coordinate training and readiness requirements with the Service force providers. Integrating landpower also includes extending the signal and network and establishing the network that supports operations by the joint force land component. Notably, security cooperation continues throughout the AOR even as the primary effort within the geographic combatant command shifts during phase zero to the conduct of a campaign in a portion of the AOR. The ability to

manage landpower within a campaign while continuing to support AOR-wide steady state activities to include security cooperation underscores the requirement for a robust theater army.

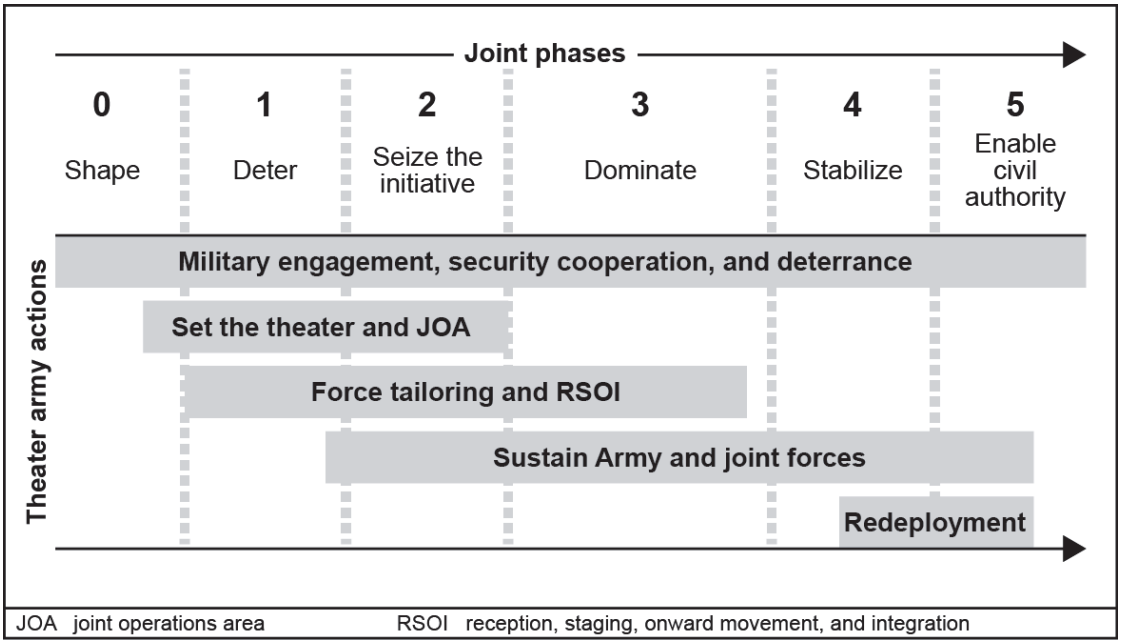

Figure 2-3. Joint phases and the theater army

Phase One—Deter

2-20. The intent of this phase is to deter an adversary from undesirable actions because of friendly capabilities and the will to use them. The deter phase is characterized by actions to protect friendly forces and indicate the intent to execute subsequent phases of the planned operation. The theater army can implement a number of flexible deterrent options during this phase. With the initial shift of the geographic combatant command from shaping to deterrence, the theater army priority of effort moves to setting the AOR and the joint operations area. Most of this initial effort focuses on refining contingency plans and preparing initial estimates for the landpower needed for flexible deterrent options. As the dimensions of the crisis take shape, the theater army examines a range of basing and deployment options. When the combatant commander decides on specific deterrent options, then the theater army begins the process of tailoring landpower for the deterrent options while refining plans for the full employment of landpower should deterrence fail to resolve the crisis. As soon as feasible, Army forces attached to the theater deploy, and the theater army receives, stages, and integrates additional Army forces into the JTF. During this phase, the theater army develops additional basing requirements. As Army forces deploy into the joint operations area, the theater army expands its footprint to sustain and protect Army, joint, and multinational forces, as directed by the GCC. Military engagement, security cooperation, and deterrence continue across the theater.

2-21. Concurrently with actions intended to confront and deter an adversary, the theater army commander sets the theater to enable landpower to exert its full capabilities. This includes extending the existing signal and network infrastructure to accept the land component and its supporting units. Enabling landpower may include negotiation and contracting through the GCC with adjacent nations to establish tactical staging bases and realignment of security cooperation efforts based on emerging threats. The theater army requests not only forces that from the ARFOR involved in deterrence, but also the theater-level units necessary as the flexible deterrent option expands and as those forces needed for supporting operations if deterrence fails. An important consideration for the theater army is training for Army forces deployed as a flexible deterrent option. The theater army works with host-nation officials to develop suitable training facilities since the deter phase may be very lengthy if it is successful.

Phase Two—Seize the Initiative

2-22. JFCs seek to seize the initiative through decisive use of joint capabilities. In combat, this involves both defensive and offensive operations at the earliest possible time, forcing the enemy to react and setting the conditions for decisive operations. When the JFC determines that joint combat power is sufficient to seize the initiative, then the theater army's priority shifts to sustaining and protecting deployed forces in the joint operations area. However, the theater army continues to request and receive Army forces, and to expand theater bases in and outside the joint operations area. During this phase the theater army expands the number and capability of its subordinate commands to meet the demand for operations in the dominate phase. Military engagement, security cooperation, and deterrence outside the joint operations area continue. The theater army initiates transition planning for operations beyond the dominate phase.

2-23. During this phase, the theater army begins planning for phases beyond phase two. As early as possible, the theater army develops plans and requests for forces for approval by the combatant commander. Planning for the transition beyond the dominate phase requires intensive coordination with the Department of the Army, supporting theater armies, the ARFOR, and theater-level commands such as the TSC. The stabilize phase often requires different Army capabilities and headquarters from those required for the dominate phase. The theater army also begins to develop redeployment plans in conjunction with the geographic combatant command staff and USTRANSCOM for Army units that will no longer be required.

Phase Three—Dominate

2-24. This phase focuses on breaking the enemy's will to resist or, in noncombat situations, to control an operational environment. Success in the dominate phase depends on overmatching enemy capabilities at the critical time and place. Operations can range from large-scale combat to various stability operations depending on the nature of the enemy. In a humanitarian crisis, this requires achieving a level of effectiveness equal to the demands of host-nation and international agencies for U.S. military support. Dominate phase activities may establish the conditions to achieve strategic objectives early or may set the conditions for transition to the next phase of the operation. The theater army's priority is sustaining Army and joint forces throughout the dominate phase. During this phase, the number of forces controlled by the theater army and its capacity reaches its maximum. The theater army staff coordinates with the ARFOR to identify capabilities required for the stabilize phase. The theater army works with the geographic combatant command to validate these requirements and transmit them to the Department of the Army and Army commands. In many campaigns, landpower necessary for the stabilize phase will differ dramatically from that used in the dominate phase. As the Department of the Army transforms requests for forces into force requirements, the theater army plans to receive forces identified for stabilization and to enable civil authority. The staff develops plans for redeployment of forces no longer required in coordination with the geographic combatant command, JFC, and ARFOR. Military engagement, security cooperation, and deterrence continue outside the joint operations area.

Phase Four—Stabilize

2-25. The stabilize phase is characterized by a shift in focus from sustained combat operations to stability operations. These operations help reestablish a safe and secure environment and provide essential government services, emergency infrastructure reconstruction, and humanitarian relief. The composition of Army forces continues to evolve. The theater army completes plans and requests forces needed for the enable civil authority phase. Redeployment begins for forces not needed for this phase. The theater army adjusts its theater posture in anticipation of new phase zero requirements. In particular, the security cooperation requirements across the AOR change to meet new realities. Typically, the combatant commander directs the theater army to plan for the establishment for long-term commitment of joint forces. This often requires the transfer of theater army assets to a standing joint force, along with the creation of a standing headquarters capable of controlling Army forces and supporting ARFOR requirements. Military engagement, security cooperation, and deterrence continue outside the joint operations area.

Phase Five—Enable Civil Authority

2-26. This phase is characterized by joint force support to legitimate civil governance. The commander provides this support by agreement with the appropriate civil authority. The purpose is to help the civil authority regain its ability to govern and administer services and other needs of the population. The theater army priority shifts to security cooperation under different conditions in the AOR. The theater army manages Army support of forces remaining in the joint operations area, normally through a new ARFOR identified and tailored for that purpose. Military engagement, security cooperation, and deterrence continue outside the joint operations area.

2-27. At the conclusion of the enable civil authority phase, the cycle of phases is complete and the combatant command resumes its phase zero posture. The environment of the theater of operations in the new phase zero will be different, and the theater army adapts its activities accordingly.

THEATER ARMY ACTIONS

2-28. Paragraph 2-29 through paragraph 2-46 examine the theater army actions across the campaign in more detail.

Military Engagement, Security Cooperation, and Deterrence

2-29. In phase zero, GCCs shape their regions through many cooperative actions with partner nations. The equipment, training, and financial assistance the United States provides to partner nations improve their abilities to secure themselves. This assistance often improves access to key regions. Security cooperation communicates U.S. intent and capabilities to potential adversaries in that region. If necessary, combat-ready Army units deploy to threatened areas to conduct exercises, communicating unmistakable U.S. intent to partners and adversaries. These are tangible effects of the Army's role in security cooperation and assistance. Other benefits are less tangible; these develop through face-to-face training involving U.S. Soldiers and the soldiers of partner nations. Working together develops trust between military partners. The impression U.S. Soldiers make upon multinational forces, local leaders, and other government agencies can produce lasting benefits. (See ADP 1 and FM 3-22 for more information on shaping and security cooperation.)

2-30. The theater campaign plan drives security cooperation in each AOR. The theater army has a critical role in the theater campaign planning process. Theater army and supporting ASCCs participate in operational planning teams, planning conferences, and the development and implementation of associated documents. This participation includes conveying Service and DOD requirements to the combatant command, conveying combatant command equities to their Service, assisting with concept design (especially tasks and activities supporting theater-level tactical military objectives), determining resources required to execute activities, and developing a synchronization plan for such activities.

2-31. The theater campaign plan differs from an operational campaign plan. The theater campaign organizes and aligns operations, activities, events, and investments in time, space, and purpose to achieve a strategic effect rather than an operational effect. While theater campaign plans have a large component related to security cooperation, they also address posture, ongoing combat operations where applicable, and the phase zero component of the combatant command's contingency planning—or setting and shaping the theater in which the theater army plays a significant role. The actions and objectives in each area will affect the other areas; the commander balances actions and objectives carefully to ensure objectives in one area reinforce those in another area without accidently undermining those of another.

2-32. The theater army, supported by the generating force, is crucial in resourcing and sustaining the security cooperation activities. The theater campaign plan identifies steady-state force and resource requirements. The theater army staff identifies and plans for likely deviations from desired requirements in geographic combatant command contingency plans. The theater campaign can accomplish the following:

- Integrate shaping (phase zero) actions directly in support of particular contingency plans with broad shaping and security cooperation activities.
- Enable DOD to synchronize global strategies with that geographic combatant command set of contingency plans.

- Incorporate the combatant commander's communication synchronization to convey clear messages to partners, friends, and adversaries. Connect posture changes to DOD's global and regional strategies and provide a vehicle for continuously reassessing posture needs, refining those needs, and updating DOD and regional posture plans accordingly.
- Identify and establish intermediate staging bases.

Set the Theater and Joint Operations Area

2-33. The term *set the theater* refers to a broad range of actions necessary to employ landpower before and during a crisis. This includes base development, theater opening, RSOI, ASOS, DOD CCSA requirements, and other sustainment-related support in the AOR. The theater army, in conjunction with its associated TSC, prepares support and sustainment estimates that outline the responsibilities and requirements for maintaining access and setting the theater where U.S. military presence is forward stationed or deployed. The theater army executes many of these responsibilities through the TSC—some during phase zero, and other actions in the deter phase. Setting the theater may also involve—

- Providing flexible Army headquarters to meet various joint command and control requirements.
- Providing force protection.
- Forward-stationing and rotational deployment of Army forces.
- Modernizing forward-stationed Army units.

2-34. The theater army and its supporting commands assess the adequacy of infrastructure in the AOR to support anticipated military operations, determine requirements for additional infrastructure, and manage infrastructure development programs assigned to Army forces for execution. The theater army develops these plans and its assigned TSC in close collaboration with the combatant command's J-4 and the Army Corps of Engineers. Infrastructure development activities may include identifying requirements for forward basing and air, land, and sea transit rights through the sovereign territories of partner or neutral nations within the AOR. The Army identifies the requirements for basing and transit rights needed to support landpower. However, the Department of State and the appropriate U.S. diplomatic mission must negotiate bilateral or multilateral agreements.

2-35. As the combatant commander shifts priorities to a specific nation or region in the AOR, the theater army focuses on setting the joint operations area. In conjunction with the geographic combatant command staff and interagency partners, the theater army identifies bases in the joint operations area for logistics, medical support, protection, and infrastructure development. The functions inherent in setting the joint operations area include identifying responsibility for ASOS and agencies, land transportation, inland petroleum pipeline operations, and common-user logistics. The associated functions of theater opening, port and terminal operations, and RSOI of Army and joint forces are critical to the initiation of military operations in the joint operations area.

2-36. The theater army also prepares to support joint command and control in the joint operations area. Army contributions to joint command and control include establishing, maintaining, and defending the communications and network architecture to support Army and joint forces operating within the joint operations area, and maintain connectivity between land-based forces and the rest of the AOR. The Army is designated as the DOD CCSA for theater communications and network architecture. Army forces execute the responsibilities primarily through the signal command (theater) assigned to support the AOR.

2-37. Theater communications support is rapidly evolving. Cyberspace operations consist of DOD information networks (formerly known as the Global Information Grid), and network operations, enterprise management, network defense, and content management. Cyberspace operations provide network and information system availability, information protection, and information delivery across strategic, operational, and tactical boundaries. This includes a full range of defensive capabilities and when necessary actions actively taken to defeat cyberspace threats.

2-38. At the joint level, cyberspace operations are operational missions accomplished by the commander, USCYBERCOM (a subunified command of USSTRATCOM). This commander provides the command and control as well as situational awareness required to operate and defend DOD information networks. Army Cyber Command, as the ASCC USCYBERCOM, extends the command and control of the network

through its OPCON relationship with each theater network operations and security center and through the Army orders process to each of the signal commands (theater).

Tailor Army Forces

2-39. Force tailoring combines two complementary requirements—selecting the right forces and deploying the forces in the optimum sequence. The first—selecting the right force—involves identifying, selecting, and sourcing required Army capabilities and establishing their initial task organization to accomplish the mission. The result is an Army force package matched to the needs of the combatant commander. The force package can accomplish little until deployed. The second requirement of force tailoring establishes order of deployment for the force package, given the available lift and the combatant commander's priorities. The U.S. Army Reserve, through augmentation staff aligned to each theater, facilitates force tailoring. For example, U.S. Army Reserve augmentation to the staff facilitates theater-level coordination with other government agencies and nongovernment agencies for security cooperation. Tailoring the force is a complicated and intensively managed Army-wide process and the theater army plays a critical role in it.

force tailoring
The process of determining the right mix of forces and the sequence of their deployment in support of a joint force commander. (ADRP 3-0)

2-40. The majority of Army conventional operating forces is designated as "Service Retained" forces in the *Global Force Management Implementation Guidance* assignment tables and is primarily based in the CONUS. FORSCOM, the largest of the Army commands, commands Active Component conventional forces (Regular Army, mobilized Army National Guard, and mobilized Army Reserve); executes training and readiness oversight of Army National Guard forces under state command; and does the same for nonmobilized Army Reserve units.

Service retained forces
Those operating forces not assigned to a combatant command by the "Forces for Unified Commands Memorandum." These forces remain under the command of the Secretary of the Army, exercised through Army commands, until allocated by the Secretary of Defense to a combatant commander through the joint global force management process.

2-41. Based upon the landpower requirements developed by the theater armies and validated by the Joint Staff, the Department of the Army and FORSCOM develop force packages based on cyclical readiness. This is the ARFORGEN process. This includes forces for contingencies and forces needed to support security cooperation activities. Wherever possible, the Department of the Army identifies regionally aligned forces that concentrate on missions and capabilities required for a particular AOR. The regionally aligned forces begin planning for their mission in conjunction with the theater army staff. The tailored force package is task-organized by FORSCOM to facilitate strategic deployment and support the gaining JFC's operational requirements. FORSCOM is not the sole provider of Army forces; other supporting ASCCs may contribute forces. The result is a set of trained and ready Army forces intended either for contingencies or for planned deployments, such as a rotation of forward-based forces.

2-42. The theater army works closely with FORSCOM to match the composition of the force with the forces identified in theater engagement plans, security cooperation plans, or contingency plans for a crisis. FORSCOM modifies force packages as needed. The theater army commander identifies the major task organization and pre-deployment training required for the mission. FORSCOM then modifies force packages and training as needed. Whenever possible, FORSCOM (or the supporting ASCC) attaches forces to its gaining higher headquarters during deployment (for example, BCTs to a different gaining division headquarters). If geography or the sequence of deployment makes this impractical, the theater army executes task organization changes when forces arrive in the AOR. The gaining theater army commander modifies ADCON as required based upon the organization of the JTF and the support structure available in the theater. Figure 2-4 illustrates force tailoring.

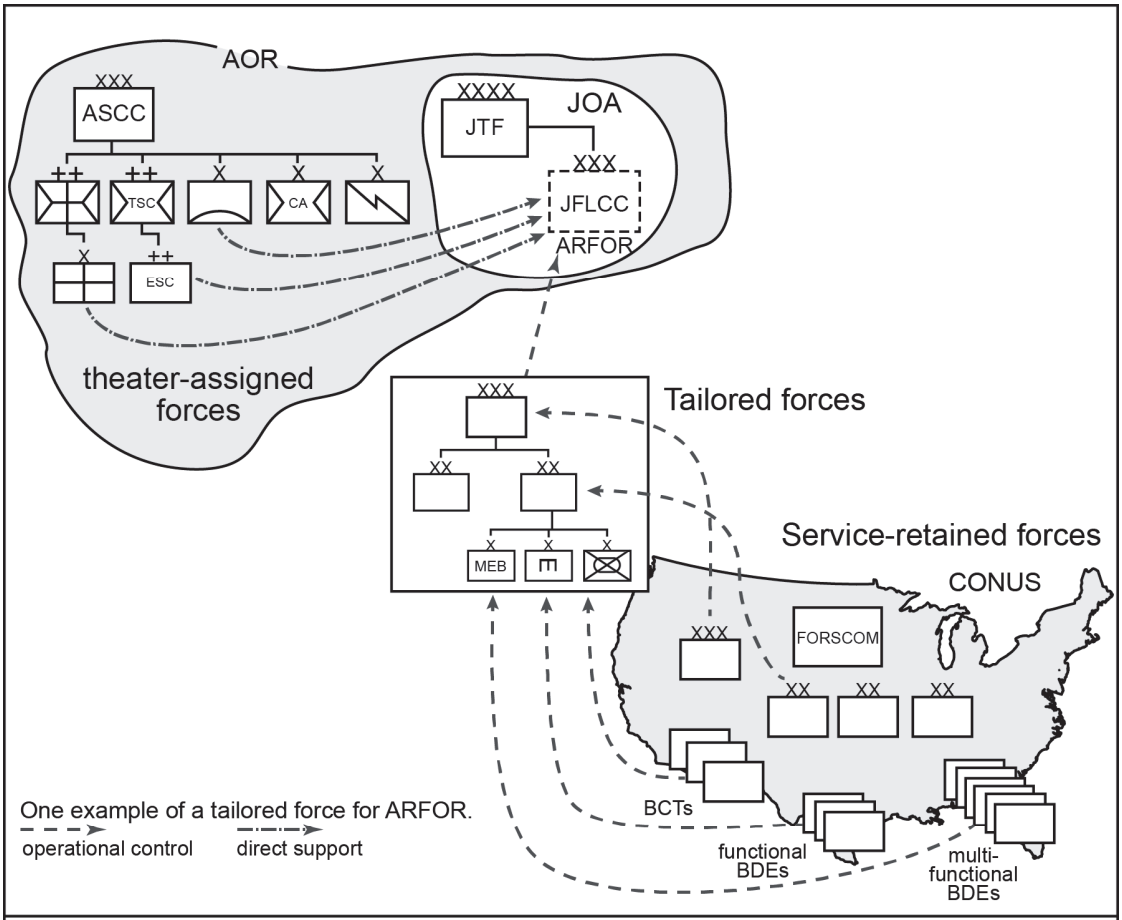

AOR	area of responsibility	ESC	expeditionary sustainment command
ARFOR	senior Army headquarters	FORSCOM	United States Army Forces Command
ASCC	Army Service component command	JOA	joint operations area
BCT	brigade combat team	JTF	joint task force
BDE	brigade	JFLCC	joint force land component commander
CA	civil affairs	MEB	maneuver enhancement brigade
CONUS	continental United States	TSC	theater sustainment command

Figure 2-4. An overview of force tailoring

2-43. The theater army also recommends the optimum deployment sequence for Army forces to the geographic combatant command staff. The geographic combatant command staff may modify this recommendation in coordination with FORSCOM and USTRANSCOM, based upon factors such as available lift, location and readiness of deploying forces, and surface transportation requirements. Since the initial deployment may not match the situation developing in the joint operations area, the theater army refines the task organization based upon the ARFOR requirements. The theater army adjusts support provided by theater assets to match the requirements of the forces on the ground.

2-44. In addition to forces allocated to the JFC from FORSCOM and supporting ASCCs, theater armies provide Army forces from theater-assigned forces. Army sustainment units (logistics and medical) normally have a support relationship with the deployed Army forces in the joint operations area. Other Army theater forces such as military police, aviation, engineers, or civil affairs units may be attached or OPCON to divisions or corps headquarters. Other units remain OPCON to the theater army and provide direct or general support to the ARFOR. (See chapter 4 and chapter 6 for additional detail.)

2-45. The organization established in force tailoring is not necessarily the same as the task organization for combat. It is a macro-level organization established to control the forces through deployment and RSOI. The gaining operational commander, typically the JFLCC, modifies this organization depending upon the situation. Once deploying Army forces have completed RSOI, the OPCON passes to the JFC and gaining functional component commander in the joint operations area. That commander further task-organizes the force for land operations as needed. (See ADRP 6-0 for a discussion of task organization.)

Reception, Staging, Onward Movement, and Integration

2-46. Except for forcible entry operations, Army forces arrive in theater via the most efficient use of available lift. Almost all personnel move by airlift, and 95 percent of their equipment and supplies move by sea. The process of reassembling personnel, equipment, and supplies is RSOI. The theater army normally assigns RSOI to the TSC and its attached ESC. Upon arrival in the AOR, attachment of the unit transfers from the supporting commander (usually FORSCOM) to the theater army. The theater army passes TACON of the unit to the ESC or other Army headquarters responsible for RSOI. Upon arrival of the deploying unit's chain of command, the theater army and gaining operational commander establish a relationship of direct liaison authorized in order to facilitate communications and planning. The ESC receives personnel and equipment at the joint theater base established in or near the joint operations area (reception). When the unit is fully assembled, it moves as a unit to a designated assembly area within the joint operations area (staging). At this point the ESC transfers OPCON to the gaining JFC or joint functional command, and the theater army reassigns ADCON to the ARFOR in the joint operations area (integration). (For a detailed discussion of RSOI, see JP 3-35 and FM 3-35.)

SUSTAIN ARMY AND JOINT FORCES

2-47. The Department of the Army is responsible for raising, training, equipping, disciplining, and sustaining Army operating forces. These functions are Title 10 or ADCON functions. The administrative chain of control passes from Department of the Army directly to the theater army for Army forces under the COCOM of that geographic combatant command. Unless modified by Department of the Army, the theater army provides ADCON of all Army forces assigned, attached, or OPCON to the geographic combatant command, including those forces engaged in exercises and training. The theater army also is responsible for the readiness and training of Army forces stationed in the AOR. It coordinates training and readiness requirements for any forces identified for deployment to the AOR with their parent Army commands or supporting ASCC.

2-48. Sustainment of Army forces under OPCON of a JTF remains a primary responsibility of the theater army throughout all phases of a campaign. The theater army sustains the deployed forces by reinforcing the organic sustainment capability of modular Army brigades and headquarters with theater army assets dedicated to logistics, health service support, and personnel services. The deployed ESC and sustainment brigades normally support on an area basis, utilizing a joint support area and bases distributed in the joint operations area. Sustainment may be augmented through an intermediate staging base located outside the joint operations area. (See ADRP 4-0 for a discussion of bases.)

2-49. The overarching consideration for all sustaining operations is to relieve the corps, division, and brigade headquarters as much as possible of the requirements for managing sustainment across the joint operations area. This grants the land commander greater flexibility to employ modular brigades using mission orders across large areas. It also facilitates rapid changes in OPCON between Army units and joint force headquarters.

Logistics and Personnel Support

2-50. The TSC manages logistics and personnel support across the entire AOR. One or more ESCs, attached to the TSC, provide logistics and personnel support within the joint operations area. The ESC provides logistics support by combining logistics and personnel support units into task-organized, multifunctional sustainment brigades. The ESC and its attached sustainment brigades deploy to the joint operations area, normally in direct support of the ARFOR. The sustainment brigades provide support on an area basis to units of the ARFOR and other joint forces. Paragraph 2-51 through paragraph 2-54 discuss the exceptions.

2-51. There are several options for command of logistics units, depending upon the geography and distribution of forces within the JTF. The most flexible option retains command in the logistics organization and provides logistics support on an area basis. The ESC is attached to the TSC and remains under its OPCON. All sustainment brigades remain attached to the ESC. With the concurrence of the JFC, the TSC places the ESC in an appropriate support relationship to the deployed ARFOR. The support relationship will vary according to sustainment requirements within the joint operations area.

2-52. In high intensity combat, the ESC will provide direct support to the ARFOR, and its sustainment brigades will provide direct support to the tactical units specified by the ARFOR. For example, large-scale, high-tempo corps operations with rapidly changing tactical situations require decentralized logistics support. The ESC, placed in direct support of a corps, normally places one task-organized sustainment brigade in direct support of each committed Army division while one or more sustainment brigades continue to provide general support to other forces in the operational areas outside the committed divisions' area of operations. The corps commander plans for this option when the scheme of maneuver and division task organization will produce very fluid maneuver and a rapidly changing situation. This will be the case during attack, pursuit, and exploitation, or in a mobile defense. A variant of this option places a sustainment brigade under OPCON of a division for detached operations. This may be the situation when an Army division is conducting operations at a great distance from the rest of the corps, and its operations are distinctly different from the remainder of the force. For example, an Army division may be defending within a different area of the joint operations area while the remainder of the land component initiates offensive operations.

2-53. In a protracted, stability intensive operations, the ESC will be in general support, with sustainment provided on an area basis from established operating bases to joint, multinational, and Army units. The ESC adjusts the size and composition of the individual sustainment brigades based on the density of Army and joint forces drawing logistics support within the distribution radius of that sustainment brigade.

2-54. The JFC may centralize sustaining operations within the joint operations area. This arrangement may support a multi-corps land force with a large contingent of Marine Corps and multinational forces. The JFC establishes a joint logistics task force built around a sustainment command and subordinates Marine Corps sustainment units and Army sustainment brigades to it. For the Army units at brigade and below, this arrangement is largely transparent; they continue to receive support on an area basis. However, it permits greater flexibility at the joint level to address competing priorities for logistics by Army, Marine Corps, multinational forces, and SOF.

Health Service Support

2-55. The MEDCOM (DS) provides health service support for the deployed joint force on an area basis. Army medical units form the backbone of a highly integrated joint medical support and evacuation system that provides advanced medical care to all deployed joint forces, interagency personnel, and any multinational forces specified by the combatant commander. The MEDCOM (DS) oversees AOR-wide health service support and exercises OPCON of deployed medical units through its operational command post. The operational command post commands one or more medical brigades, which in turn control multifunctional medical battalions. The medical units subordinate to the medical brigade (support) can include hospitalization, medical regulating and evacuation, dental services, laboratory services, veterinary services, combat operational stress control, treatment, preventive medicine, and medical logistics. Medical units will normally locate within joint and Army bases. The distribution and capability of medical units depends upon the density of U.S. forces, available infrastructure, and evacuation capabilities. The MEDCOM (DS) may place a task-organized medical unit in direct support of an Army division involved in high-intensity, fluid combat operations or entry operations.

VERY LARGE-SCALE COMBAT OPERATIONS

2-56. Very large-scale combat operations may require the U.S. Army to conduct land operations with multiple corps-sized formations, either as part of as part of a mature theater of war or under a joint or multinational command. This could require a theater army headquarters to expand and transform into an operational land headquarters (field army equivalent) exercising command over multiple Army corps and a Marine expeditionary force. This is the original purpose of numbered armies and the role performed by

Third U.S. Army in both Operation Desert Storm and Operation Iraqi Freedom I. In this case, U.S. Army corps would operate as tactical headquarters alongside Marine expeditionary forces. Such a campaign may include large multinational forces and would operate under a joint or multinational land component. In order to assume this role, the theater army requires extensive augmentation and time to assimilate not only the personnel, but also the additional responsibilities. For example, before Operation Iraqi Freedom I, Third U.S. Army (part of USARCENT) received approximately 70 Marine Corps staff officers to enable it to control the Marine expeditionary force. Figure 2-5 illustrates a theater army in the role of a multinational forces land component. If designated as a multinational forces land component, the Army headquarters will follow joint doctrine contained in JP 3-31 and JP 3-16. Note that in such a campaign, theater-level commands (such as the TSC and Army air and missile defense command [AAMDC]) may deploy into the joint operations area to control several functional support brigades.

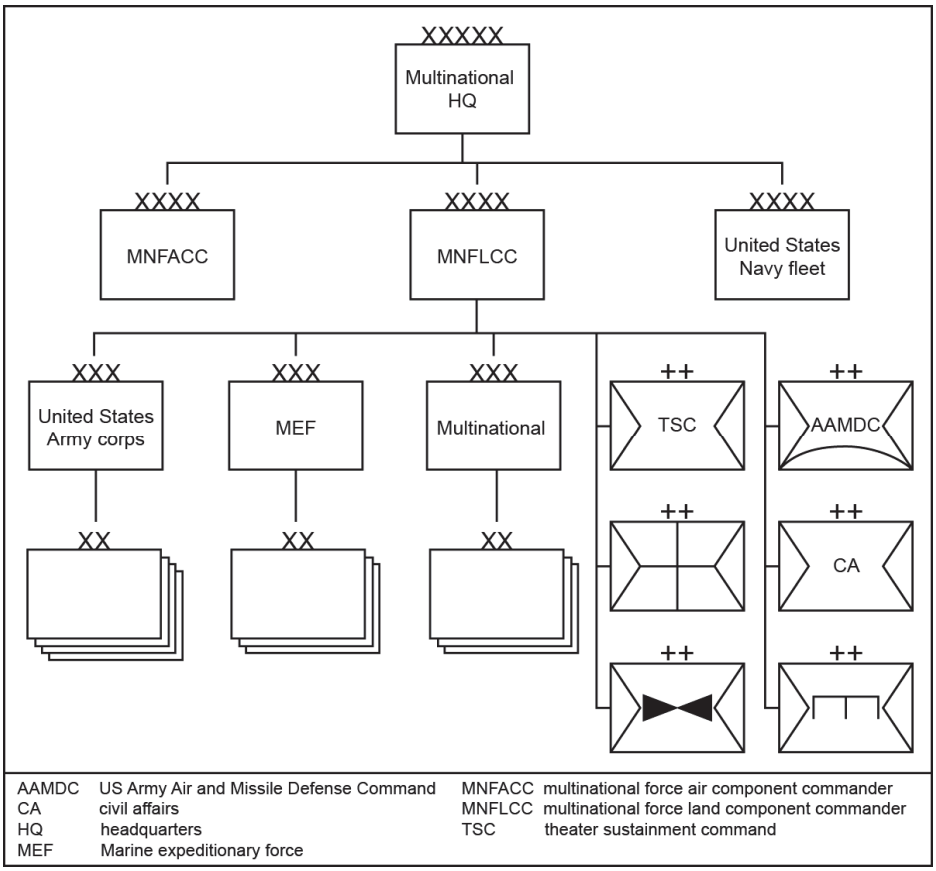

Figure 2-5. Theater army as a multinational force land component in a theater of war

2-57. The field army (when constituted) performs operational ARFOR tasks and is the Army component of the joint force to which it is assigned. A field army, specifically tailored to the mission requirements, may be assigned to a JFC with an enduring operational requirement. Typically, a subunified command is established instead of a JTF when the military operation is anticipated to be enduring or protracted. In this case, a field army would be appropriate as the Army component or ARFOR to the subunified command.

2-58. The theater army exercises ADCON over the field army and its subordinate Army forces, and it provides the field army and its JFC with all Army Service functions. This includes Title 10, common-user logistics, ASOS, and Army executive agent responsibilities, and sustainment and medical support for Army and joint forces operating in the joint operations area or the theater of operations where the field army is assigned. At the direction of the GCC, the theater army may delegate execution authority to the field army for specified Army service functions.

2-59. The situation on the Korean Peninsula is an example of an enduring military operation for which the United States established a subunified command (United States Forces, Korea) as the joint force headquarters, instead of a JTF. Until the situation in the Republic of Korea is further resolved, the U.S. Army will retain a unique structure on the Korean Peninsula. Eighth U.S. Army will serve as the forward deployed field army headquarters and ARFOR to United States Forces, Korea or its successor joint and combined forces headquarters. Eighth U.S. Army is configured and would be staffed to provide an operational capability for Army forces engaged in multinational operations. Eighth U.S. Army remains under the ADCON of USARPAC for most Army Service functions.

DEFENSE SUPPORT OF CIVIL AUTHORITIES

2-60. Two geographic combatant commands, USNORTHCOM (also known as NORTHCOM) and USPACOM (also known as PACOM) have responsibility for DSCA. The majority of DSCA falls to USNORTHCOM with responsibility for the 48 continental United States, Alaska, and the U.S. possessions in the Caribbean. USPACOM accomplishes DSCA missions in Hawaii, U.S. territories, and U.S. possessions in the Pacific Ocean.

2-61. USARNORTH has unique responsibilities focused on homeland defense, homeland security, DSCA, and theater security cooperation. Its responsibilities include the 48 continental United States, Alaska, and the Caribbean territories of the United States. Within this vast area, USARNORTH prepares deliberate contingency plans for homeland defense, DSCA, and theater security cooperation. It conducts operations in close coordination with the Department of Homeland Security. USARNORTH maintains defense coordinating officers and defense coordinating elements in each of the ten Federal Emergency Management Agency regions.

2-62. Because the domestic operational environment is so unique, many tasks performed by USARNORTH and USARPAC in support of domestic authorities are distinct. The two most important differences distinctions are the legal limitations imposed on federal forces operating within the United States and the different command structure for units of the National Guard. To highlight the most important differences, Regular Army forces may not directly enforce the law, although they may provide equipment and training for law enforcement agencies. National Guard forces remain under state command. National Guard forces operate in parallel with federal military forces but under a distinct state chain of command. There are exceptions. JP 3-28 and ADRP 3-28 provide extensive discussions about the unique requirements of DSCA missions.

THEATER ARMY HEADQUARTERS

2-63. The theater army headquarters divides its staff focus among AOR-wide control, support of Army forces, and ADCON of Army and joint forces within an active joint operations area. The staff will continue to plan, prepare, and assess military engagement, security cooperation, and deterrence outside the joint operations area. Simultaneously, the staff will focus on support of Army, joint, and multinational forces inside a joint operations area. Because each geographic combatant command is unique, each theater army will have unique methods for organizing its headquarters to address these challenges.

MAIN COMMAND POST

2-64. The theater army main command post has limited operational responsibilities for Army forces operating in a joint operations area; however, it provides support such as intelligence analysis and long-range planning. The theater army main command post is the location for both routine day-to-day operations as well as crisis action planning. The main command post is typically both a day-to-day headquarters as well as an operational-level command post. For example, the regionally focused military intelligence brigade collects against threats and adversaries in the AOR. It also provides all-source intelligence concerning the threat and civil considerations to the theater army and other U.S. forces operating in the AOR, as required. The TSC provides sustainment (less medical) for all Army forces forward-stationed, transiting, or operating in the AOR, including those Army forces assigned or under OPCON to JTFs operating in joint operations areas established in that AOR. In addition, the TSC provides ASOS, other government agencies, common-user logistics, and other specific requirements established under specific

operation plans (OPLANs) or contingency plans and Army CCSA agreements. (Figure 2-6 depicts the organization of a main command post.)

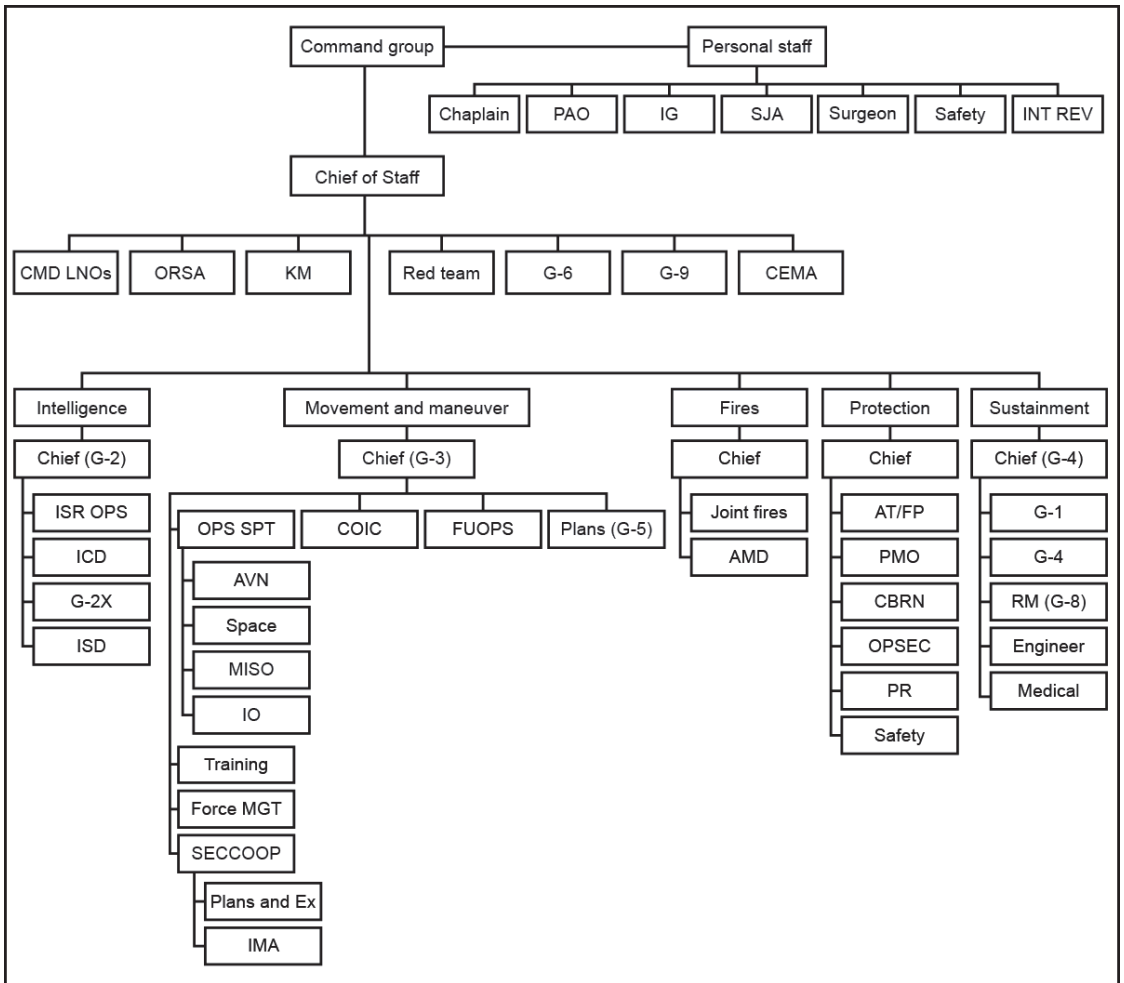

AMD	air and missile defense	IMA	international military affairs
AT	antiterrorism	INT	internal
AVN	Aviation	IO	information operations
CBRN	chemical, biological, radiological, and nuclear	ISD	intelligence support directorate
CEMA	cyber electromagnetic activities	ISR	intelligence, surveillance, and reconnaissance
CMD	command	KM	knowledge management
COIC	current operations integrating cell	LNO	liaison officer
Ex	exercises	MGT	management
FP	force protection	MISO	military information support operations
FUOPS	future operations	OPS	operations
G-1	assistant chief of staff, personnel	OPSEC	operations security
G-2	assistant chief of staff, intelligence	ORSA	operations research and systems analysis
G-2X	assistant chief of staff, human intelligence	PAO	public affairs officer
G-3	assistant chief of staff, operations	PMO	provost marshal office
G-4	assistant chief of staff, logistics	PR	personnel recovery
G-5	assistant chief of staff, plans	REV	review
G-6	assistant chief of staff, signal	RM	resource management
G-8	assistant chief of staff, financial management	SECCOOP	security cooperation
G-9	assistant chief of staff, civil affairs operations	SJA	staff judge advocate
ICD	intelligence control directorate	SPT	support
IG	inspector general		

Figure 2-6. Theater army main command post organization

2-65. The theater army oversees AOR-wide contingency planning and coordination, including developing and maintaining operation and contingency plans, updating regionally focused intelligence estimates, and updating Service-specific support plans to the geographic combatant command theater campaign plan. The theater army collaborates with divisions, corps, or other designated Army headquarters assigned to execute major exercises in the AOR or to execute specific operation or contingency plans. It also collaborates with those headquarters aligned with the geographic combatant command for planning purposes. In particular, the theater army contributes its considerable regional expertise (including cultural factors and regionally focused intelligence and cyber threat estimates) to the collaborative planning process with division or corps headquarters preparing to conduct operations in the AOR.

2-66. The main command post is primarily a planning and coordination element. It develops and maintains OPLANs, contingency plans, and Service supporting plans for the combatant commander's theater campaign plan. The main command post may control Army forces involved in operations, training exercises, and other security cooperation activities. It also coordinates collaborative planning with any Army headquarters designated to deploy within the AOR. This collaborative planning facilitates the transition of existing operation and contingency plans into the incoming headquarters' own operation orders for execution. The main command post provides planning support to the contingency command post when it deploys command forces involved in limited contingencies or to participate in exercises and other theater security cooperation activities.

2-67. The main command post also manages the support given Army, joint, and multinational forces deployed to joint operations areas established in the AOR. This support includes theater opening, RSOI, common-user logistics, and other Services associated with Army CCSA responsibilities. Most of these responsibilities are sustainment related and performed through a subordinate TSC or deployed ESC.

2-68. The plans-to-operations transition across the integrating cells (current operations integrating cell, future operations cell, and plans cell) in the main command post differs from a corps or division headquarters. For example, in phase zero, the G-5 staff, with the support of an operational planning team element, prepares the Army portions of the geographic combatant command's theater engagement, security cooperation, and contingency plans. The training section of the G-3 may plan exercises and readiness tests, while the current operations integrating cell monitors exercises, deployment, and redeployments in progress. In phase two, the plans cell supports campaign planning. The future operations cell prepares plans and orders for flexible deterrent options, and the current operations integrating cell will monitor the AOR and deployment of Army forces outside the AOR. The current operations integrating cell will control the in-theater activities such as RSOI and air and missile defense activities as well as establish direct liaison authorities between deploying Army headquarters. By phase three, the plans cell will be refining phase four plans and preparing initial estimates for the transition to stabilization and post-campaign posture. The chief of staff reorganizes the staff to obtain the necessary liaison and planners from the supporting commands, while adjusting the priorities for the integrating and functional cells. The chief of staff also determines the individual augmentation requirements for the staff and ensures that requests for additional specialists go to the Department of the Army.

2-69. Throughout the campaign, the chief of staff and commander monitor the stress on the mission command warfighting function created by current operations in the active joint operations area, and they monitor the need to maintain an AOR-wide perspective. Although their priorities are the support of Army forces committed in combat, they exercise mission command and shift the detail and method of support onto their subordinate commands. The chief of staff and commander maintain a balance between the needs of the JTF and the needs of the post-conflict theater.

CONTINGENCY COMMAND POST

2-70. The contingency command post enables the theater army to conduct small-scale operations. This may include command of up to two BCTs or their equivalent for 30 days. Environments for these operations vary from peaceful and permissive through uncertain to hostile. Employing the contingency command post for an assigned mission involves a trade-off between the contingency command post's immediate responsive capability and its known limitations. These limitations address the scale, scope, complexity, intensity, and duration of operations that it can effectively command without significant augmentation. The contingency command post includes a command group, a personal staff section, and intelligence,

movement and maneuver, fires, protection, and sustainment cells depicted in figure 2-7. The headquarters support company of the HHB provides support to the contingency command post when deployed.

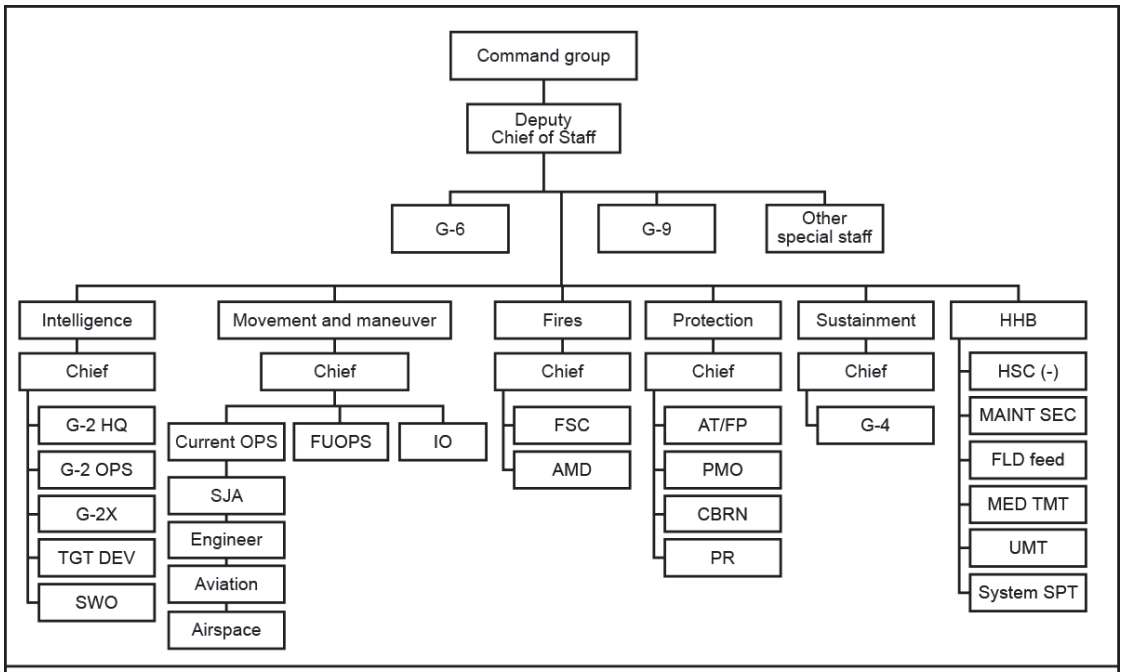

AMD	air and missile defense	HSC	headquarters support company
AT	antiterrorism	IO	information operations
CBRN	chemical, biological, radiological, and nuclear	MAINT	maintenance
DEV	development	MED	medical
FLD	field	OPS	operations
FP	force protection	PR	personnel recovery
FSC	fire support cell	PMO	provost marshal office
FUOPS	future operations	SEC	section
G-2	assistant chief of staff, intelligence	SJA	staff judge advocate
G-2X	assistant chief of staff, human intelligence	SPT	support
G-4	assistant chief of staff, logistics	SWO	staff weather officer
G-6	assistant chief of staff, signal	TGT	target
G-9	assistant chief of staff, civil affairs operations	TMT	treatment
HHB	headquarters and headquarters battalion	UMT	unit ministry team
HQ	headquarters		

Figure 2-7. Theater army contingency command post organization

2-71. The contingency command post is organized with a command group, support and security elements from the HHB, and a staff organized under the same five functional cells found in the main command post organization. Unlike the main command post, the contingency command post is organized with only two of the three integrating cells—a robust current operations integrating cell and a small future operations cell. The contingency command post depends upon the main command post for long-range planning and special staff functional support, if required. The contingency command post staff can access and employ joint capabilities (such as fires, intelligence, and signal) and coordinate additional required capabilities through the main command post. The contingency command post special staff normally includes personnel from the main command post's knowledge management and public affairs sections. Sometimes the special staff may include representatives from other special staff elements based on the assessment of the operational variables.

JOINT TASK FORCE HEADQUARTERS

2-72. The combatant commander may use the theater army contingency command post as the nucleus of a small JTF headquarters. The contingency command post receives additional personnel based upon a joint

manning document or individual augmentation requests for Army and other Service forces to accomplish the mission. The contingency command post is a viable option for short notice and limited duration operations because of its established internal staff working relationship. This capitalizes on the contingency command post's flexibility and rapid deployment. The contingency command post is deployable by C-130 (intratheater) aircraft. The contingency command post receives joint augmentation from the geographic combatant command in accordance with a joint manning document for that specific mission.

2-73. The theater army provides the geographic combatant command with a deployable command post element for contingencies that develop in the AOR. If a humanitarian crisis occurs simultaneously with a campaign, the only headquarters available may the theater army's contingency command post. The theater army commander and chief of staff should maintain the integrity of the contingency command post during the campaign for this eventuality. However, the contingency command post should redeploy as soon as adequate Army headquarters are operational.

HEADQUARTERS AND HEADQUARTERS BATTALION

2-74. The theater army HHB provides administrative and sustainment support to the theater army headquarters and contingency command post when the contingency command post deploys. The HHB commander, staff, and three companies assist the theater army commander and staff in the areas of administration, logistics, deployment, redeployment, life support, command post operations, and coordination for area security. The HHB receives direction from the theater army chief of staff. The HHB includes a command group, an S-1 section, an S-2 and S-3 section, an S-4 section, unit ministry teams, a headquarters support company, an operations company, and the intelligence and sustainment company. Figure 2-8 on page 2-20 shows the organization of the HHB.

2-75. The headquarters support company is composed of a company headquarters section, the HHB staff, and the food service, medical treatment, and maintenance sections. This company—designed to deploy with the contingency command post—provides sustainment support and commands the local security section provided by an outside organization. Personnel assigned to the headquarters support company include the commander and deputy commander sections, commander's personal staff, chief of staff section, special staff, HHB staff, contingency command post command group, contingency command post special staff, and contingency command post support sections. The headquarters support company commander is designated as the headquarters commandant for the deployed contingency command post. The headquarters support company commander is responsible for administrative and sustainment support for the headquarters as well as planning and commanding the access control, perimeter defense, and reaction forces.

2-76. The operations company includes a company headquarters and the movement and maneuver, fires, protection, G-6, G-9, and CEMA staff elements. The intelligence and sustainment company includes a company headquarters section and the personnel assigned to the intelligence and sustainment functional cells.

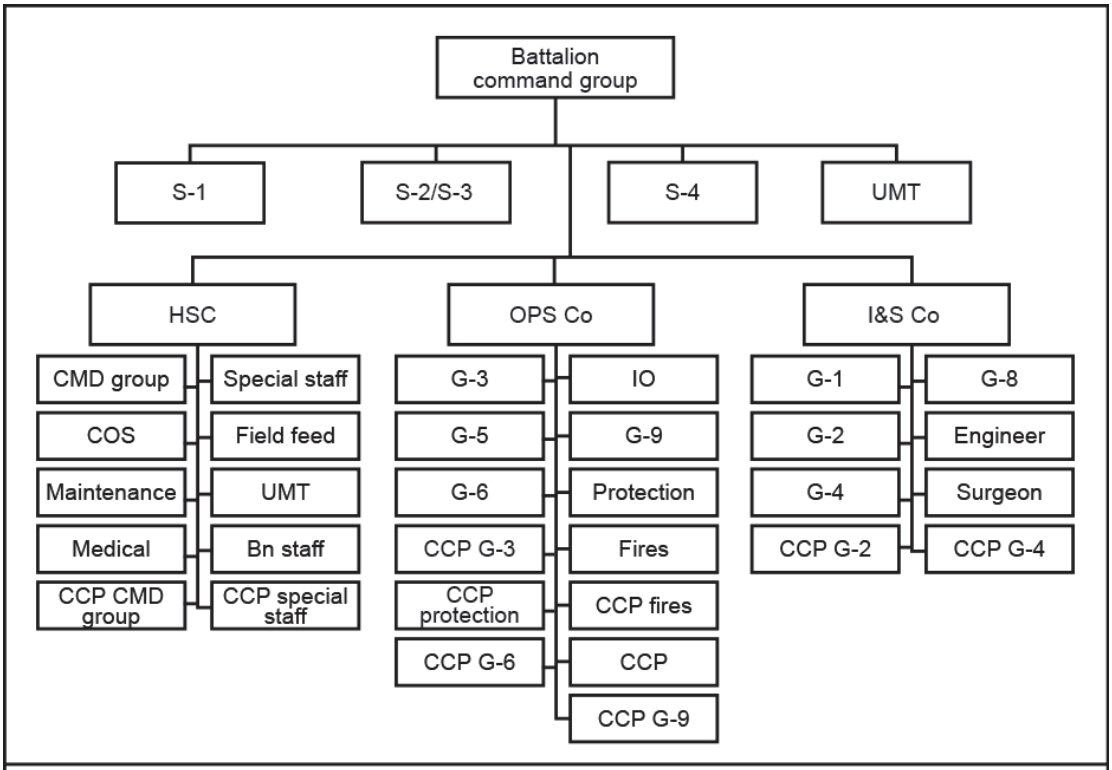

Bn	battalion	G-8	assistant chief of staff, financial management
CCP	casualty collection point	G-9	assistant chief of staff, civil affairs operations
Co	company	HSC	headquarters support company
COS	chief of staff	I&S	intelligence and support
CMD	command	IO	information operations
G-1	assistant chief of staff, personnel	OPS	operations
G-2	assistant chief of staff, intelligence	S-1	battalion manpower and personnel staff officer
G-3	assistant chief of staff, operations	S-2	battalion intelligence staff officer
G-4	assistant chief of staff, logistics	S-3	battalion operations staff officer
G-5	assistant chief of staff, plans	S-4	battalion logistics staff officer
G-6	assistant chief of staff, signal	UMT	unit ministry team

Figure 2-8. Theater army headquarters and headquarters battalion organization

Chapter 3

Theater-Level Commands and Units

ASSIGNED AND ALIGNED THEATER FORCES

3-1. Each theater army has assigned theater-level forces for enabling capabilities (sustainment, signal, medical, military intelligence, and civil affairs) based on specific requirements for the AOR. These commands and brigades perform theater army tasks to support a joint operations area. The TSCs or ESCs perform the majority of these tasks, normally through a support relationship to the ARFOR in the joint operations area. The theater army tailors additional functional or multifunctional support brigades based on mission variables. Divisions and corps then employ these supporting brigades as needed. The command and support relationships for these organizations differ depending on the specific requirements of each AOR.

3-2. Each theater army has assigned Army forces that enable it to support military engagement, security cooperation, and deterrence for that geographic combatant command. These units allow the theater army to support Army forces operating in the AOR and extend ASOS, interagency partners, and multinational forces. The size and composition of assigned forces vary based on the continuing requirements for Army support. Figure 3-1 illustrates a range of typically assigned forces. Not every theater army will have the forces shown. Not every theater army will have these units assigned. In some cases, a brigade is assigned to an Army command (or direct reporting unit), and aligned to the theater army. In other cases, the theater army has a brigade in lieu of a full command. In each case, the aligned command or brigade is not part of the force pool but is committed to the supported theater army and is integrated in all theater planning.

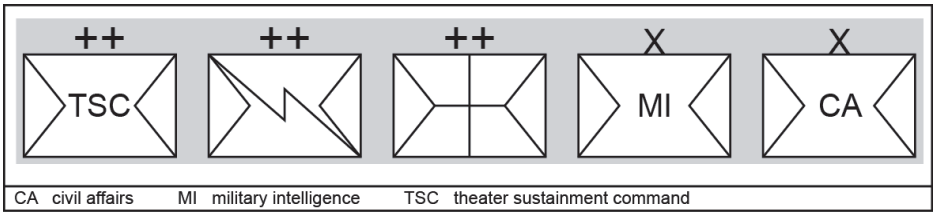

Figure 3-1. Example of theater commands and brigades

Note. Theater-level units in the Reserve Components are regionally aligned but not assigned to theater armies. For example, most of the civil affairs brigades are in the Army Reserve. When mobilized, these units are attached by a DOD order to their gaining geographic combatant command. Upon attachment, the theater army exercises OPCON over them. This is the case with all theater army units in the Reserve Components.

THEATER SUSTAINMENT COMMAND

3-3. Normally, one TSC is assigned to each theater army. Each theater army (less USAFRICOM) has an assigned TSC. USAFRICOM receives theater sustainment support from USEUCOM. The theater army provides support to Army forces and common-user logistics to other Services as directed by the combatant commander and other authoritative instructions. The TSC is the Army's senior logistics headquarters within the AOR. When directed, the TSC provides lead service sustainment and executive agency support for designated logistics and services to other government agencies, multinational forces, and nongovernmental organizations. The TSC concentrates on strategic and operational sustainment management. The command ensures the information flow from strategic deployment, distribution, and sustainment partners is accurate, timely, and adequate to support the actions of the theater sustainment

forces providing movement control for RSOI and all other sustaining operations. The TSC coordinates strategic and operational distribution through its distribution management center. The TSC ensures that an integrated and responsive theater-level distribution system is employed to anticipate and respond to theater army requirements. The TSC will receive and deploy an ESC when it determines that a forward command headquarters is required. The ESC will employ sustainment brigades to execute theater opening, theater sustaining, and theater distribution operations. Generally, when two or more sustainment brigades deploy to a joint operations area, the Army tailors the TSC with an ESC. Figure 3-2 depicts a TSC. (See ATP 4-94.)

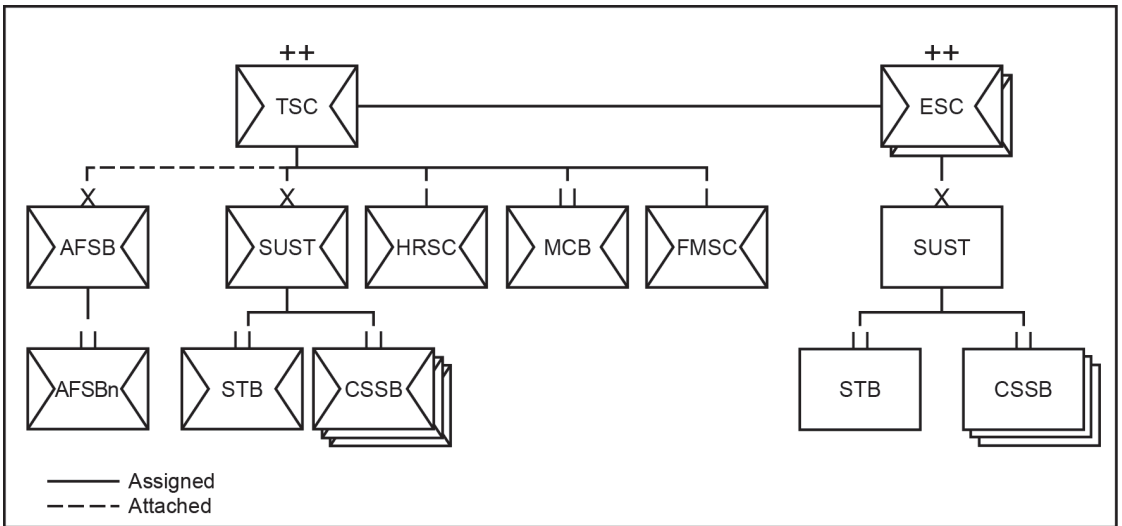

AFSB	Army field support brigade	HRSC	human resource sustainment center
AFSBn	Army field support battalion	MCB	movement control battalion
CSSB	combat sustainment support battalion	STB	special troops battalion
ESC	expeditionary sustainment command	SUST	sustainment brigade
FMSC	financial management support center	TSC	theater sustainment command

Figure 3-2. Example of theater sustainment command

Expeditionary Sustainment Command

3-4. For each joint major operation or campaign requiring substantial commitment of Army forces, at least one ESC is attached to the TSC. The ESC commands attached sustainment units in a land area of operations defined by the JFC. The ESC extends the ability of the TSC to manage logistics and personnel support by becoming the forward-deployed sustainment headquarters in the joint operations area. Additional ESCs may be attached to the TSC if the combatant commander establishes a JSA or staging base. Depending on the command structure within the theater, ESCs may support specific Army forces within a joint operations area or support other ESCs and sustainment brigades with theater opening or theater distribution capabilities. In most cases, the ESC will provide direct support to the ARFOR. In certain circumstances, the ESC may be under OPCON of a corps, ARFOR, or JTF as required by an appropriate order. It may serve as a basis for an expeditionary command for joint logistics when required by the combatant commander or JFC. The ESC concentrates on synchronizing operational-level sustaining operations to meet the day-to-day and projected operational requirements of the supported force. It accomplishes this, in part, by establishing mid-range and short-range planning horizons derived from the supported commanders OPLAN, commander's intent, commander's critical information requirements, tempo, and distribution system capacity. The ESC supports the deployed force while the TSC maintains AOR-wide focus. The expeditionary capability of ESCs becomes critical when multiple JTFs operate within the AOR.

3-5. The theater army attaches sustainment brigades to the ESC. The ESC, when deployed, normally assumes command of all Army sustainment units (less medical) that are not organic, assigned, or attached to a brigade within that area of operations or joint operations area. Deployment of the ESC improves

logistics and personnel support by placing the ESC in proximity to the supported force. When given a regional focus by the Army, the ESC can refine that portion of the TSC logistics preparation of the theater for the JFC. The ESC normally establishes its command post near the ports of debarkation from which it can effectively control both reception and sustaining operations. This location may be a secure base within the joint operations area or in the JSA. The ESC is responsible for theater opening, including the execution of port and terminal operations and RSOI.

3-6. The theater army commander normally specifies an Army support relationship between the ESC (supporting commander) and the ARFOR (supported commander). This is normally direct support. When conditions warrant, the ESC may pass to the OPCON or TACON of a corps, ARFOR, or JTF. When the ESC provides direct support to the ARFOR, it subordinates units of the ARFOR on an area basis. For example, a sustainment brigade supports all Army units within a division's area of operations and provides Army support to agencies and other Services, regardless of task organization. Operational and tactical requirements vary as will command and support relationships between supporting and supported units. (See Parts Three and Four.)

Sustainment Brigade

3-7. The theater army commander and TSC commander task-organize sustainment brigades for the campaign. Each sustainment brigade is a multifunctional sustainment organization with a flexible, modular headquarters organization capable of accomplishing multiple sustaining missions. Each sustainment brigade is a key organization in linking sustainment support from the operational to tactical levels. It can provide a full range of logistics and personnel services to supported units. The number of CSSBs attached to the sustainment brigade varies with the task organization established by the ESC commander. Subordinate units of the sustainment brigade may include CSSBs, functional logistics battalions, and functional logistics companies, platoons, and detachments. Selected CSSBs may also be organized to provide specific types of support to BCTs and to other support brigades lacking full internal sustainment capability. The sustainment brigade usually has human resources and financial management units attached. Under normal circumstances, the sustainment brigade will not have medical organizations attached.

3-8. The sustainment brigade is attached to either a TSC or ESC. The ESC normally provides direct support to the deployed ARFOR. In turn, the sustainment brigade provides general support to all Army, joint, and multinational forces located in or passing through an area determined by the ESC. Although the area support may coincide with a tactical area of operations, for example a division area of operations, it does not have to. The ESC commander adjusts area support based upon sustainment demands and the capabilities of each sustainment brigade. In general, the sustainment brigade providing area support is capable of providing support from the operational to tactical levels.

Medical Logistics Management Center

3-9. The medical logistics management center's forward support team normally co-locates with the distribution management center within the TSC (or ESC) and is subordinate to the MEDCOM (DS) commander. The medical logistics management center's forward support team is the supply chain manager responsible for executing and influencing theater Class VIII policies and the commander's intent. The medical logistics management center is the single integrated medical logistics manager as directed by the combatant commander. (FM 4-02.1 discusses medical logistics management center.)

Specialized Sustainment Units

3-10. The TSC normally receives augmentation from the Army Material Command and Army direct reporting units. These specialized units include the Financial Management Center, Human Resource Sustainment Center, and Army field support brigade. The Army field support brigade, for example, coordinates material readiness, logistics civil augmentation program support, and acquisition logistics within the theater. Depending upon the situation in theater, these units will deploy their subordinate teams to the ESC and its sustainment brigades. The Army Contracting Command provides tactical contracting teams to deployed units. Contracting may become a key enabler during the early phases of a campaign. (See ADRP 4-0 for additional information.)

THEATER-LEVEL SIGNAL SUPPORT

3-11. The joint force depends upon an integrated communications architecture that connects strategic, operational, and tactical commanders across the globe. DOD information networks are the DOD's globally interconnected, end-to-end set of information capabilities, associated processes, and personnel for collecting, processing, storing, disseminating, and managing information on demand to joint forces and support personnel. DOD information networks includes all owned and leased communications and computing systems and services, software (including applications), data, security services, and other associated services necessary to achieve information security. Operation and defense of DOD information networks is largely a matter of overarching common processes, standards, and protocols integrated by USSTRATCOM. (See JP 6-0.) The Army connects to DOD information networks through the NETCOM and its subordinate signal commands and brigades.

Network Command

3-12. NETCOM is the Armywide provider for all network services. NETCOM enables commanders to exercise mission command and freedom of access to the network in all phases of operations. It installs, operates, and defends the Army's Global Network Enterprise. NETCOM accomplishes this mission through four signal commands (theater). Two of the signal commands (theater) are in the Regular Army and assigned to NETCOM. The other two are in the Reserve Component and assigned to the U.S. Army Reserve Command.

Signal Command (Theater)

3-13. Each signal command (theater) provides communications engineering and system control capabilities for the theater-level network. The signal command and its subordinate units plan, engineer, install, operate, maintain, and protect the Army's portion of the theater network. The signal command theater normally exercises OPCON and ADCON for the Army signal organizations within an AOR.

3-14. Within the CONUS, NETCOM commands the signal command (theater). The U.S.-based signal command supports multiple Army commands, direct reporting units, and ASCCs, but it remains assigned to NETCOM. Outside CONUS, one signal command (theater) provides network and information systems support for all Army forces in that AOR. The signal command (theater) installs, operates, maintains, and defends communication and information systems in support of the theater army headquarters, and as required, to joint and multinational organizations throughout the theater. Although the signal command (theater) is not deployable, they can deploy various capabilities to support specific mission requirements. A signal command (theater) has one or more assigned theater network operations and security centers that serve as the operational component of network operations. The theater network operations and security centers are OPCON to Army Cyber Command for day-to-day defense of the Army's portion of the DOD information networks.

3-15. The signal command (theater) commands multiple signal organizations with different capabilities. Subordinate signal organizations include nondeployable and deployable signal brigades. The theater strategic signal brigade is not deployable; the theater tactical signal brigade is. These may be assigned, attached, OPCON, or in direct support to the signal command (theater).

Theater Strategic Signal Brigade

3-16. The theater strategic signal brigade based in the United States includes network enterprise centers (known as NECs). When stationed outside CONUS, a theater strategic signal brigade includes strategic signal battalions, fixed satellite communications facilities, and many other strategic capabilities. The theater strategic signal brigades plan, engineer, install, operate, maintain, and defend the Army portion of the communication synchronization backbone in the form of terrestrial and satellite radio links and cable systems. At Army camps, posts, and stations where the director of information management belongs to NETCOM, network enterprise centers (CONUS) or strategic signal battalions (outside CONUS) are the designated providers of baseline services to Army and other government agencies. The network enterprise center or strategic signal battalion at each installation functions as part of the larger Army Global Network Enterprise while remaining responsive to customer needs. Network enterprise centers and strategic signal

battalions support the generating force and operating forces engaged in operations through the transparent delivery of LandWarNet capabilities. These capabilities include secure and nonsecure fixed-voice communications, wireless voice, data and video connectivity services, and video conferencing services (not including desktop video teleconferencing collaboration). Network enterprise centers and strategic signal battalions provide telecommunications infrastructure support, collaboration and messaging services, application and Web-hosting services, and desktop management support, to include service desk and continuity of operation services. Although the theater strategic signal brigade and its subordinate units do not deploy, they can, based on mission requirements, deploy personnel with specific technical skills to support ongoing operations.

Theater Tactical Signal Brigade

3-17. The theater tactical signal brigade is deployable and normally includes expeditionary signal battalions, combat camera assets, and tactical installation and networking companies. Theater tactical signal brigades and expeditionary signal battalions are the Army signal formations optimized for deployment. Theater tactical signal brigades provide detailed planning, engineering, installation, maintenance, and defense of tactical networks. Theater tactical signal brigades augment the corps or division G-6 and command one or more expeditionary signal battalions in large-scale operations. The expeditionary signal battalion supports deployed Army forces that have no organic network systems and services. Expeditionary signal battalions reinforce the network operations capabilities of an Army corps, division, BCT, and multifunctional support brigade headquarters, and provide signal support to other Services components or multinational headquarters as required. Expeditionary signal battalions provide line-of-sight and beyond-line-of-sight communication links and network operations capabilities to extend information services to supported headquarters. Normally, the theater army tailors expeditionary signal battalions to a theater tactical signal brigade, although the theater army may detach an expeditionary signal battalion to support a corps or division headquarters, depending upon the situation.

MEDICAL COMMAND (DEPLOYMENT SUPPORT)

3-18. The MEDCOM (DS) serves as the senior medical command within the theater. The MEDCOM (DS) commands medical units that provide health care in support of deployed forces. The MEDCOM (DS) is a regionally focused command and provides subordinate medical organizations to operate under the medical brigade (support) or multifunctional medical battalion (medical battalion [multifunctional]). The MEDCOM (DS) includes a main command post and an operational command post. Figure 3-3 on page 3-6 illustrates the theater medical structure.

Medical Brigade

3-19. The medical brigade (support) is a subordinate organization of the MEDCOM (DS). It is tailored with multifunctional and specialized medical units. The focus of the medical brigade (support) is driven by the factors of mission, enemy, terrain and weather, troops and support available, time available, and civil considerations (METT-TC). One or more medical brigades may support Army forces in a joint operations area. One medical brigade (support) may provide direct support to a division commander, another may provide Army health service support on an area basis to another division and corps headquarters, and a third may provide area medical support to theater sustainment forces in the JSA. These organizations often provide simultaneous support to interagency organizations and multinational operations occurring within their areas of operations. The medical brigade provides all the control and planning capabilities necessary to deliver responsive and effective medical support. The medical brigade (support) can provide an early-entry module, an expansion module, and a campaign module. It can be tailored to the operation. As the supported forces grow in size and complexity, the medical brigade (support) can deploy additional modules that build upon one another to support unified land operations. When required, the commander of a medical brigade (support) may exercise mission command for task-organized medical functional teams, detachments, and companies.

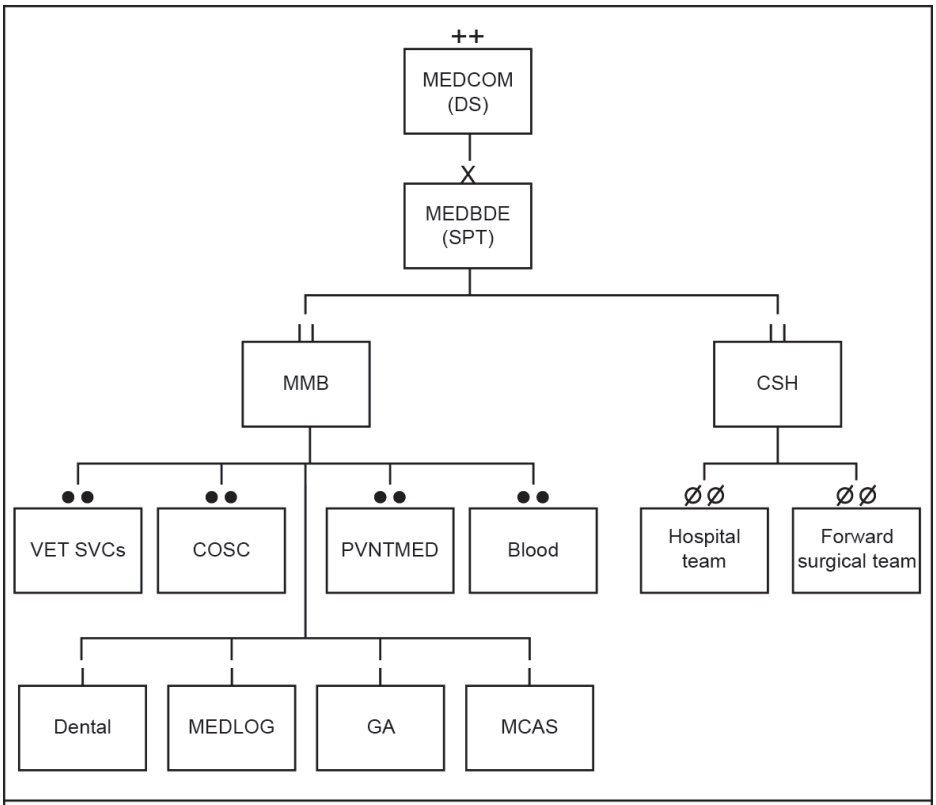

COSC	combat and operational stress control	MEDCOM	medical command
CSH	combat support hospital	MEDLOG	medical logistics
DS	deployment support	MMB	multifunctional medical battalion
GA	ground ambulance	PVNTMED	preventive medicine
MCAS	medical company (area support)	SVC	service
MEDBDE (SPT)	medical brigade (support)	VET	veterinary

Figure 3-3. Modular medical support for the Army

Medical Battalion (Multifunctional)

3-20. The medical battalion (multifunctional) is designed as a multifunctional headquarters. It can also command expeditionary forces in early-entry operations and facilitate the RSOI of theater medical forces. Any higher-echelon medical companies, detachments, and teams in theater may be assigned, attached, or placed under the OPCON of a medical battalion (multifunctional). The medical battalion (multifunctional) is under the command of the medical brigade (support). One medical battalion (multifunctional) will normally provide medical support on an area basis.

Area Medical Laboratory

3-21. The MEDCOM (DS) may attach an area medical laboratory to the medical brigade (support) or medical battalion (multifunctional) if the supported units face a biological threat in the area of operations. The health protection mission is supported by the area medical laboratory. This laboratory can provide field confirmatory analysis of suspect chemical and biological warfare agents.

THEATER MILITARY INTELLIGENCE BRIGADE

3-22. A theater military intelligence brigade normally supports each theater army. Every theater military intelligence brigade is attached or under OPCON of the theater army. Although the military intelligence brigade headquarters is theater-committed, it can provide subordinate battalions for operations outside its

AOR. When deployed to support the ARFOR in a joint operations area, military intelligence battalions are normally attached to a military battlefield surveillance brigade (BFSB) or other brigade-level organization.

Note. USARNORTH is subject to domestic intelligence oversight restrictions. Because of these restrictions applicable to the homeland, USARNORTH has different requirements for Army military intelligence support.

3-23. The theater military intelligence brigade provides regionally focused collection and analysis in support of theater army daily operations requirements and limited contingency operations. In particular, the theater army headquarters relies heavily on the military intelligence brigade for threat characteristics, intelligence estimates, threat and civil considerations, data files and databases, and all-source intelligence products. These products support theater army planning requirements, including development of Army plans supporting the theater campaign plan and maintenance of OPLANs and contingency plans. The theater army headquarters' intelligence cell depends on the theater military intelligence brigade for intelligence operations and analytic support.

3-24. A theater army and its subordinate theater military intelligence brigade may provide intelligence support to Army and joint forces in the joint operations area in one of two ways. First, they deploy military intelligence assets forward and then attach or place those assets under OPCON or in direct support to the ARFOR. Second, they provide intelligence support on a general support or direct support basis. In either case, the supported Army forces operating headquarters tasks the military intelligence brigade assets by identifying information requirements and priority intelligence requirements. The associated collection requirements are assigned to the supporting military intelligence brigade or its operational elements.

3-25. The theater military intelligence brigade's regional focus enhances its capabilities to develop and exploit language skills and cultural insights specific to the AOR. The theater intelligence brigade's regional focus also provides the benefits of continuity and cultural context to its analytic intelligence products. The theater military intelligence brigade can collect, analyze, and track the threat characteristics and doctrine of partner nations, enemies, and adversaries over many years. These abilities allow the brigade to create and maintain a valuable database of intelligence regarding regional military forces, persons of interest, and evolving doctrine and capabilities of regional military forces.

CIVIL AFFAIRS COMMAND

3-26. Each theater army (except for USARNORTH) receives support from a Reserve Component civil affairs command. The civil affairs command provides theater-level civil affairs planning, coordination, policies, and programs in support of the geographic combatant command's regional civil-military operations strategy and stabilization, reconstruction, and development efforts. The civil affairs command mobilizes and deploys with one or more civil affairs brigades and civil affairs planning teams. It also has one or more civil-military operations centers (CMOCs). One civil affairs brigade normally supports the land component command; a second brigade may support the ESC. A civil affairs brigade with its CMOC can become the core of a joint civil-military operations task force under the OPCON of the JTF. Civil affairs battalions from the civil affairs brigade are task-organized to Army divisions. Civil affairs planning teams augment the geographic combatant command, theater army, joint land forces component command, and division, corps, and brigades. Such augmentation provides liaison, coordination, education and training, and area assessment functions. The theater army commander may employ a civil affairs brigade CMOC in support of the G-9. Civil affairs elements are normally attached to the headquarters they support. (See FM 3-57.)

3-27. A theater army normally has an aligned, regionally focused Regular Army civil affairs battalion. The battalions provide regionally focused civil affairs support to the theater army commands as well as conventional forces through the ARFORGEN process. The civil affairs battalion focuses on the supported commander's ready capability to plan, enable, shape, and manage civil affairs operations as well as provides dedicated support to stability operations. The civil affairs battalion also enables, enhances, and supports civil-military operations assigned to the theater army command by the theater security cooperation plan. During stability operations, the battalion provides tactical-level civil affairs support to a division command or an equivalent-level Army command or JTF.

OTHER THEATER-LEVEL ARMY FORCES

3-28. For protracted major operations, the theater army may be reinforced by an array of Army capabilities deployed from the United States and supporting theater armies. Other Army functional or multifunctional headquarters and units may be made available to the theater army based on requirements of the AOR such as forward stationing, base operations, security force assistance missions, theater security cooperation activities, or ongoing military operations. These Army functional or multifunctional units may have either a command or a support relationship with the theater army. In some cases, the Department of the Army tasks certain functional or multifunctional battalions to support more than one theater army.

THEATER AVIATION

3-29. Each theater aviation brigade can conduct assault or general support aviation tasks in support of the theater and its subordinate commands. Unlike combat aviation brigades, a theater aviation brigade lacks the attack and reconnaissance battalions. The theater aviation brigade has a mix of lift helicopters and fixed-wing aircraft. The brigade can conduct air assault, air movement, and sustaining operations. It will normally not have attached unmanned aircraft systems. The theater aviation brigade reinforces combat aviation brigades with additional assault, general support, heavy lift, and aeromedical evacuation. It flies fixed-wing sorties in support of the ARFOR, theater army, and JFC.

3-30. A theater aviation sustainment maintenance group may be attached to a theater army to provide depot-level maintenance support. The theater aviation sustainment maintenance group may be subsequently attached to the TSC. (See TC 3-04.7.)

3-31. Army air traffic service units at the theater level consist of the theater airfield operations group with its subordinate airfield operations battalions. These units are normally attached to the theater aviation command; they establish and operate airfields as needed in the AOR. Advanced operations bases can operate a fully instrumented airfield with airport surveillance radar approach, precision approach radar, and controlling airspace necessary to support airfield operations. (See FM 3-04.120.)

ARMY AIR AND MISSILE DEFENSE COMMAND

3-32. When required by the geographic combatant command, one AAMDC will be attached to the theater army, if not assigned. Air and missile defense units in the AOR are assigned or attached to the AAMDC.

3-33. The JFC establishes air and missile defense priorities, allocates forces, and apportions air power. The JFC typically assigns overall responsibility for counterair and interdiction missions to the JFACC. Normally, the JFACC also serves as both the AADC and the airspace control authority. The JFACC is responsible for defensive counterair operations. The AADC coordinates with joint and multinational partners to develop procedures for the theater air and missile defense plan. The AAMDC supports the AADC for air and missile defensive operations throughout the area of operations.

3-34. The AAMDC commander has several responsibilities. These include command of all subordinate Army air and missile defense units; army air and missile defense coordinator for the land component and ARFOR; and deputy AADC if designated. The AAMDC commander has overall responsibility for planning Army air and missile defense operations in support of the JFC. The AAMDC task-organizes and assigns missions to subordinate brigades. The AAMDC has dedicated liaison teams able to deploy to a major theater. It provides elements to the joint force air component, joint force land component, and joint special operations task force to integrate air and missile defense operations.

3-35. The threat from hostile ballistic missiles, aircraft, cruise missiles, and unmanned aircraft systems may originate from outside the joint operations area. Therefore, the JFACC may have AOR-wide responsibility as the AADC. The AAMDC commander distributes air and missile defense assets to protect not only the joint operations area, but also other high-value assets across the AOR. If the AAMDC is not located in the joint operations area, the air defense artillery brigade commander may serve as the deputy AADC. The air defense artillery brigade commander may serve as the deputy AADC. That brigade takes responsibility for planning and for providing liaison to the JFLCC and AADC or JFACC. (JP 3-01, FM 3-01, FM 3-01.7, and FM 3-01.94 explain the command and support relationships for theater air and missile defense.)

THEATER ENGINEER COMMAND

3-36. The theater engineer command provides theater-wide engineer support as well as engineer support to forces deployed within a joint operations area. The engineer command supervises geospatial support, construction, real property maintenance activities, line of communications sustainment, engineer logistics management, and base development. The command has primary responsibility for theater infrastructure repair or development as required. The command supports Department of State or host-nation efforts to restore essential services and aids in infrastructure development. Subordinate units of the command include tailored engineer brigades.

3-37. The theater engineer command typically serves as the senior engineer headquarters for the theater army as well as all assigned or attached engineer brigades and other engineer units. When directed, it may also command engineers from other Services and multinational forces and provide oversight of contracted construction engineers. The command provides peacetime training and support of military engagement for their supported respective combatant commanders. The command also coordinates closely with the senior contract construction agents in the joint operations area.

3-38. The theater engineer command can deploy modular staff elements and organizations to provide the operational commander with technical engineering expertise and support. Each command can deploy its main command post and two deployable command posts to provide flexibility and a rotational capability. The Army Corps of Engineers augments the engineer command post as required and provides construction contracting, real estate, and interagency coordination. DOD information networks enable deployed elements to collaborate with subject matter experts in the Army Corps of Engineers, other Services technical laboratories and research centers, and the civilian community.

3-39. In some cases, the theater army receives an engineer brigade in lieu of an engineer command. When assigned or attached to the theater army, the engineer brigade is tailored to conduct combat engineer, general engineering, or geospatial engineer operations. The engineer brigade can rapidly deploy in modular elements to support the corps, division, JTF, or theater-level mission. The engineer brigade can provide a wide range of technical engineering expertise and support including construction design and management, coordinating support from the Army Corps of Engineers, and other Services' technical laboratories and research centers. The engineer brigade can control low-density, high-demand engineer assets to include military working dogs, an engineer facility detachment, forward engineer support teams, and facilities engineer teams, bridge units, and others. The brigade relies on DOD information networks to connect with engineering expertise within the Army and across the DOD. These capabilities include technical assistance, project planning and design, contract construction, real estate acquisition, infrastructure support, and support to nation-building capacities. (See FM 3-34 and ATTP 3-34.23 for more information.)

CHEMICAL, BIOLOGICAL, RADIOLOGICAL, AND NUCLEAR UNITS

3-40. Army CBRN units offer a range of capabilities to theater (joint) force protection operations. Units such as the standing joint force headquarters for elimination and chemical, biological, radiological, nuclear, and high-yield explosives (CBRNE) operational headquarters support the combatant commander, JFC, and functional components faced with a CBRN threat. The CBRN force organization within a theater depends on weapons of mass destruction (WMD) threat. Based on the mission variables prevailing in the theater, the theater army commander will request and tailor Army CBRN forces for the GCC. (See FM 3-11.)

Standing Joint Force Headquarters for Elimination

3-41. When ordered, a GCC may coordinate U.S. military efforts to identify, counter, secure, and eliminate WMD threats. This mission requires special skills forces not normally organic to a geographic combatant command staff.

3-42. The standing joint force headquarters for elimination (SJFHQ-E) provides the GCC with the planning, intelligence, and operational capabilities required to eliminate a foreign nation's WMD and related programs. It provides a full-time, trained joint command and control element able to integrate into deployed headquarters to help accomplish the WMD elimination mission. The SJFHQ-E is a permanent headquarters trained and ready to act. It works closely with the GCC, completing crisis planning and testing response procedures during major exercises.

3-43. Leveraging the capabilities of the Defense Threat Reduction Agency and USSTRATCOM's Center for Combating Weapons of Mass Destruction, the SJFHQ-E deploys to augment the geographic combatant command headquarters and accomplish the WMD elimination mission. The SJFHQ-E provides robust technical resources and expertise to the geographic combatant command and its subordinate commands. The SJFHQ-E provides the command and control necessary to locate, characterize, secure, disable, and dispose of hostile WMD so they no longer pose a threat. The SJFHQ-E includes specialized technical intelligence oversight.

CBRNE Operational Headquarters

3-44. The CBRNE operational headquarters is DOD's deployable headquarters for directing operational-level elimination of WMD. The CBRNE operational headquarters is a multifunctional headquarters consisting of CBRN, EOD, nuclear, intelligence, signal, and medical specialists. The headquarters can be tailored and task-organized based on the mission and situation. The CBRNE operational headquarters' operational command post can also serve as a JTF headquarters for elimination of WMD.

3-45. The CBRNE operational headquarters commands specialized, technical operations that achieve campaign objectives for elimination of WMD. The CBRNE operational headquarters has capabilities to support a GCC, Service component commander, or JTF commander directing and synchronizing each of the four activities associated with elimination of WMD (isolation, exploitation, destruction, and monitoring and redirection). The CBRNE operational headquarters also provides CBRNE threats and hazards-related technical expertise to supported commanders and helps establish conditions for the long-term elimination of WMD production sites and other related activities. It accomplishes its mission throughout the range of military operations. The CBRNE operational headquarters is can support overseas campaigns and homeland security operations (defense support of civil authorities) simultaneously.

3-46. The CBRNE operational headquarters is organized, trained, and equipped to serve as a subordinate JTF under a JFC. It does not conduct major combat operations as, for example, an Army corps headquarters does. Although the CBRNE operational headquarters' subordinate units facilitate the JFC's protection requirements, the CBRNE operational headquarters lacks organic security elements. It depends on the supported unit for operational area security requirements beyond individual protection. Figure 3-4 shows the organization of the CBRNE operational headquarters. (See also ATP 3-11.36.)

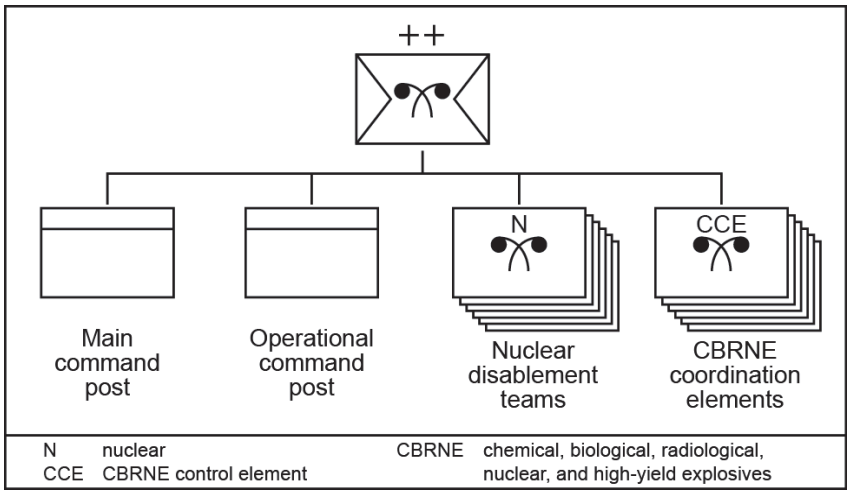

Figure 3-4. CBRNE operational headquarters

EXPLOSIVE ORDNANCE DISPOSAL GROUP

3-47. A theater army supporting major operations is allocated an EOD group. An EOD group commander can exercise mission command for two to six EOD battalions. EOD battalions support Army forces at the theater army, JTF, combined JTF, corps, and division levels. EOD groups and battalions position their

EOD companies at locations where they can support the maneuver commander. The EOD group headquarters commands all Army EOD assets and operations in a theater and can serve as the basis for a counter-improvised explosive device task force. The senior EOD commander normally functions as the EOD special staff officer for the senior deployed Army headquarters. (See ATP 4-32, FM 3-34.210, and FM 3-34.214.)

REGIONAL SUPPORT GROUPS

3-48. Regional support groups deploy to provide contingency and expeditionary base operations support. These groups have responsibilities for managing facilities, providing administrative and logistics support of Soldier services, and ensuring the security of personnel and facilities on a base camp.

MILITARY POLICE SUPPORT

3-49. The theater army normally receives one MP command when more than one MP brigade is required. For MP tasks across the AOR, the MP command provides an organizational framework. The MP command focuses on reinforcing and augmenting tactical-level MP efforts and developing the theater detention or resettlement operations base requirements. The commander of the MP command also serves as the commander of detainee operations. The theater-level MP force is tailored to a specific region based on several factors:

- Nature of the operation, whether unilateral, joint, or multinational.
- Size of the security areas.
- Maturity of the theater of operations.
- Nature of the civilian population found within the support area—friendly or hostile.
- Ability of the host nation to provide MP-related support.
- The extent of civil police operations.
- U.S. and multinational detainee evacuation and detention policy.
- MP support required for main supply routes within the division, corps, and joint support areas.
- The number of designated critical facilities to secure.
- Resources or key personnel requiring dedicated MP security.
- Ability of host-nation forces to control the civilian population to preclude interference with military operations.

(FM 3-39 discusses MP forces.)

Provost Marshal

3-50. The senior MP officer assigned or attached to the theater army becomes the provost marshal for the AOR. The senior MP officer assigned or attached to the theater army becomes the provost marshal and is responsible for assisting the commander in exercising control over MP forces in the AOR. The provost marshal is responsible for coordinating MP assets and operations for the command. The commander typically designates the provost marshal as a personal staff officer for law enforcement issues concerning U.S. military forces and U.S. civilians. The provost marshal—

- Advises the commander and staff of MP capabilities.
- Prepares plans and policies.
- Coordinates MP and detainee operations.
- Assists, coordinates, and supervises supporting and supported units' interactions.
- Reviews current MP operations.
- Coordinates with allied forces and host-nation military and civilian police.
- Synchronizes military working dog support.

3-51. The theater army provides personnel, administrative, morale, detention, resettlement, and confinement services within the AOR. (JP 3-63 provides the Army doctrine on detention operations.) The

MPs receive, process, and safeguard the detainees. The MP detention battalion and MP battalion provide this support and are responsible for—

- Controlling detainees and dislocated civilians.
- Coordinating with other government agencies, host-nation personnel, military territorial organizations, civilian police authorities, and nongovernmental organizations on matters pertaining to control of detainees and dislocated civilians.
- Exercising OPCON of all detention and resettlement units.
- Handling detainees as set forth by U.S. law, the Geneva Conventions, other international laws, and the United Nations, as applicable.
- Handling U.S. military prisoners, to include operating a theater-level military confinement facility.

3-52. A military intelligence battalion (interrogation) may be attached or placed in direct support of the MP command accomplishing an internment mission. The interrogation battalion is functionally not a part of the theater military intelligence brigade.

Military Police Brigades

3-53. The MP brigade is one of the functional brigades of the Army. It can commandup to five mission-tailored MP battalions; integrate capabilities from all three MP disciplines (police operations, detention operations, and security and mobility support); and integrate police intelligence operations. It can also command other non-MP units (focused on performing area support, detention, or resettlement tasks) and synchronize MP support across multiple organizations that control an area of operations in support of stability tasks. A functional MP brigade is not designed to control terrain; significant augmentation and task organization would be required to assign the MP brigade an area of operations.

3-54. The corps or division requires one or more MP brigades when the number of MP units or the functional nature of MP missions (such as the synchronization of technical MP capabilities across an area of operations) requires brigade-level command. A corps normally receives a MP brigade headquarters to command the MP units in its area of operations. Once deployed, MP brigades become the focal point for apportioning and allocating mission-tailored MP forces across the area of operations.

Criminal Investigation Command

3-55. The Army Criminal Investigation Command helps theater army commanders maintain discipline and order by preventing or investigating crimes. This command is a direct reporting unit whose special agents in the field report through the Army Criminal Investigation Command's chain of command (detachment to battalion to group) to the commanding general of the Army Criminal Investigation Command. This general reports directly to the Chief of Staff of the Army and Secretary of the Army. Normally an MP group (criminal investigation division) supports a theater army. The group is placed in general support of the theater but remains under the OPCON of the Army Criminal Investigation Command. Commanders of criminal investigation command tactical units advise their supported commanders on criminal investigation matters, as appropriate, although no formal operational command relationship exists. The MP group (criminal investigation division) ensures the connectivity between all criminal investigation command units within and external to the theater. (See FM 3-39.)

Military Police Command

3-56. An MP command is normally established and assigned directly to the theater army in a mature theater with several MP brigades and a criminal investigation command group. Once established, the senior MP commander serves as the theater army provost marshal and is normally designated as the chief of detainee operations.

INFORMATION OPERATIONS SUPPORT

3-57. The Army provides information operations support to the theater army through elements dedicated to helping theater organizations analyze and operate within an increasingly complex information environment.

These units augment theater forces with deployable mission-tailored support teams and CONUS-based operational planning support, intelligence analysis, and technical assistance. They train to operate within the joint information operations doctrinal construct and the Army's inform and influence construct. These support organizations include the 1st Information Operations Command (Land) from the Regular Army and theater information operations groups from the Reserve Components. The 1st Information Operations Command (Land) is a subordinate command of INSCOM and under ADCON of the Army Cyber Command. These organizations provide the following support:

- Field support teams provide information operations subject matter expertise to supported commands. The teams help those commands with the planning, execution, and assessment of information operations.
- Vulnerability assessment teams help the supported commands identify information operations and cyberspace vulnerabilities within their operational procedures, policies, practices, and training. The teams also collaborate with the supported commands as they work to resolve the identified vulnerabilities.
- Operations security support teams assist supported commands in assessing and developing unit operations security programs.
- Reachback elements provide information operations and cyberspace operational planning support, intelligence analysis, and technical assistance for deployed forces requesting support.
- Cyber opposing forces provide a noncooperative cyberspace threat during major exercises and training center rotations to help fully challenge the ability of deploying units operate in a hostile cyber threat environment.

3-58. Digital liaison detachments can provide liaison capability among Army forces, joint or multinational forces land component, JTF, subordinate headquarters, and multinational headquarters to ensure communication, mutual understanding, and unity of purpose and action.

BATTLEFIELD COORDINATION DETACHMENT

3-59. A battlefield coordination detachment (BCD) is a specialized, regionally focused Army element that serves as the senior Army operational commander's liaison with the air component or joint force air component command. A BCD is co-located with the joint air operations center (JAOC), combined air operations center, or the Air Force air operations center. The BCD is the Army's interface for systems connectivity to the JAOC and for personnel integration with their JAOC counterparts. Tasks include facilitating the exchange of current intelligence and operational data, processing air support requests, monitoring and interpreting the land battle situation, coordinating air and missile defense, coordinating airlift, and integrating airspace requirements. (See ATTP 3-09.13.)

3-60. The BCD supports the ARFOR commander (see discussion of ARFOR in paragraph 1-57). When the corps is either the joint force land component command or ARFOR, the BCD commander becomes the corps commander's liaison to the JAOC. The corps staff relays land component requirements and requests for joint force air component command support through the BCD, and the BCD represents the corps commander throughout the joint air tasking cycle in the JAOC.

MILITARY INFORMATION SUPPORT OPERATIONS

3-61. A tailored military information support task force supports the combatant commander, JTF commander, theater special operations commander, and joint special operations task force commanders. The military information support task force plans, develops, and (when directed) executes military information support operations (MISO). The military information support task force functions as the central coordination point for all MISO activities executed in the AOR. Military information support task forces contribute to the planning and execution of discreet, precise, and scalable MISO to achieve the joint commander's overall objectives.

3-62. Military information support groups from the Army Reserve support conventional Army forces within an AOR. The group controls military information support task forces that support Army corps, divisions, and brigades. A military information support task force normally operates in support of a corps, but may provide direct support to a division. The group's capabilities are tactical in nature and lack the

level of analysis, production, and dissemination required at the operational and strategic levels. They receive augmentation (language and cultural expertise, regional analysis, and mass communications delivery capability). The regional and media operations battalion from the combatant command level normally reinforces the task force with these capabilities. Depending upon its missions, the military information support task force receives additional augmentation from the supported maneuver unit and the Army Reserve strategic dissemination company. Selected MISO units train to support forcible entry operations.

ARMY SPECIAL OPERATIONS FORCES

3-63. The theater special operations command is the subordinate special operations command through which the GCC normally exercises OPCON of all SOF within the AOR. (See FM 3-05.) The commander of the theater special operations command serves as the primary advisor to the combatant commander for applying regionally aligned, ARSOF. As directed by the geographic combatant command, the theater army provides support to deployed SOF. The special operations commander coordinates with the theater army for sustainment requirements. The ADCON of ARSOF and logistics support of SOF unique items will normally remain in special operations channels.

THE EXPANDED THEATER

3-64. Protracted campaigns that include large-scale combat operations cause the theater army to expand to support Army, joint, and multinational forces. This occurs as the combatant commander adapts the joint command and control mechanism to the demands of the campaign. The theater army maintains its AOR-wide focus while developing a mature support structure within the joint operations area. The mature theater could include some or all of the commands shown in figure 3-5.

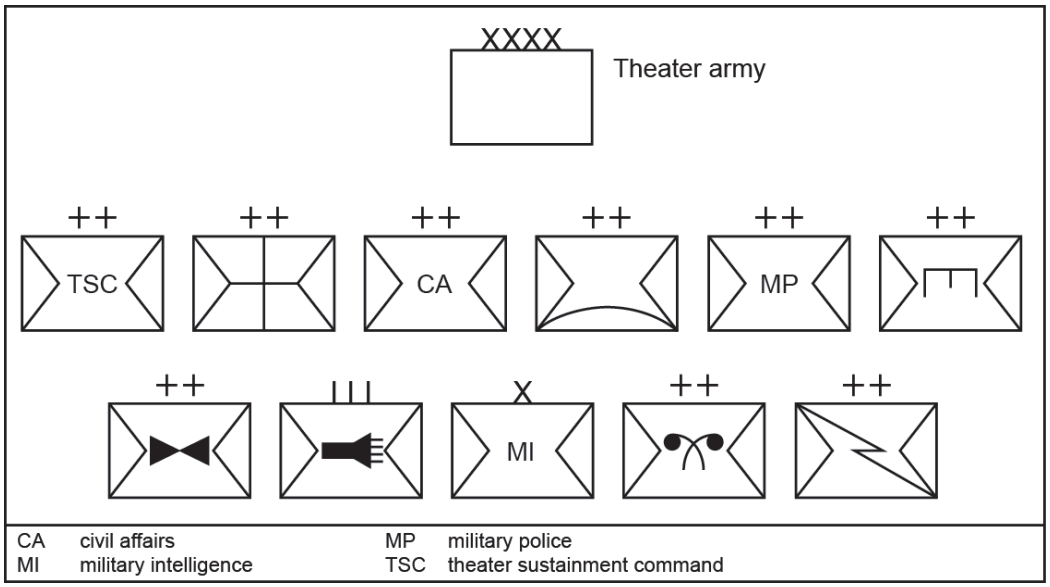

Figure 3-5. Example of mature theater

DEPENDENCIES

3-65. The theater army headquarters depends on theater-enabling units for staff functions or supporting capabilities. While these enablers may vary considerably by size and type between geographic combatant commands, paragraph 3-66 through paragraph 3-72 explain basic theater army dependencies.

3-66. The theater army depends on the theater signal command or brigade for connectivity to all LandWarNet services, including the establishment and operation of the theater network architecture to support theater army headquarters and all Army and joint forces operating within the AOR. The theater

army headquarters has no organic signal capability and depends on the theater signal command or brigade for all network and signal capabilities. These capabilities include regional hub node, joint network node, or command post node elements to support the contingency command post when it deploys to conduct operations.

3-67. The theater army depends on the garrison command of the installation on which it is located for installation access control and local security of the permanent headquarters (garrison or installation security). Regional support groups provide contingency base operations functions at intermediate staging bases or bases in the Army support area.

3-68. The theater army depends on the theater military intelligence brigade for access to top secret and sensitive compartmented information communications and information systems used for analytical support. The access enables the theater intelligence unit to provide regionally focused collection, analysis, and production to support theater army planning (OPLAN or concept plan development) and operational intelligence to support conduct of limited contingency operations. In addition, the theater intelligence unit may provide regionally focused intelligence collection and analysis in support of JTFs, JFLCC headquarters, ARFOR, and other Army forces operating in joint operations areas within the AOR.

3-69. The theater army depends on the Army Materiel Command for support through the aligned Army field support brigade, contracting support brigade, and logistics civil augmentation program. The Army field support brigade provides national level, materiel-focused sustainment support, as well as logistics civil augmentation program planning and management. The contracting support brigade provides operational contract support and planning assistance.

3-70. The theater army depends on the Army Corps of Engineers for engineering and construction (including roads and buildings), real estate, and environmental management products and services. Additionally, an engineer topographic company or geospatial planning cell provides geospatial information and services to the theater army.

3-71. The MP protective services detachment provides protective service details for the theater army commander, deputy commanders, and other designated high-risk personnel, as required. A force protection team assists the theater army antiterrorism or force protection section in protection, physical security, antiterrorism, and response force operations.

3-72. The theater army also depends on several unique teams to accomplish specialized functions. Defense Logistics Agency personnel provide the theater army logistics reach to the national supply system. A civil affairs planning team from a civil affairs brigade or command provides staff augmentation to the theater army G-9 for operations. A modular CBRN team is assigned to the theater army to establish a full-time CBRN planning expertise and assessment capability within the headquarters. Public affairs detachments or teams augment the organic theater army staff and establish a media support or broadcast center, if required. An Army band is assigned to the theater army to enhance unit cohesion and Soldier morale and provide musical support. The theater army depends on the human resources sustainment center and financial management center of the TSC for the execution of specified personnel and financial management activities. Digital liaison detachments provide liaison between the theater army and multinational headquarters or partners during operations and exercises.

JOINT THEATER ENABLERS

3-73. If the theater army assumes an operational headquarters role, the combatant commander provides it with joint enablers. The Joint Enabling Capabilities Command of the USTRANSCOM provides mission-tailored, joint capability packages to combatant commanders to facilitate rapid establishment of joint force headquarters, fulfill global response force execution, and bridge joint operational requirements. This command includes the joint planning support element, joint communications support element, and joint public affairs support element. The joint planning support element provides rapidly deployable, tailored joint planners, operators, logisticians, knowledge managers, and intelligence specialists. This first element accelerates the formation and increases the effectiveness of newly formed joint force headquarters. The joint communications support element provides rapidly deployable, en route, early-entry, and scalable command, control, communications, computer, intelligence, surveillance, and reconnaissance capabilities across the range of military operations. This element facilitates rapid establishment of joint force headquarters and bridges joint relevant requirements. The joint public affairs support element provides a ready, rapidly deployable joint public affairs capability to combatant commanders. This last element facilitates rapid establishment of joint force headquarters, bridges joint public affairs requirements, and manages public affairs training to meet theater information challenges.

PART TWO

The Army Corps

Part two discusses the Army corps headquarters and operations at the corps echelon. The corps headquarters can serve as the ARFOR as a joint force land component headquarters under a joint task force, as a joint task force headquarters (with joint augmentation), and as a tactical-level land force headquarters as part of a multinational land component. It is deployable and scalable. In combat it can command Army, Marine Corps, and multinational divisions across the range of military operations. The corps headquarters is the most versatile of the echelon above brigade formations. It commands Army, joint, and multinational forces engaged in crisis response, limited contingency operations, major operations, and campaigns.

Part two includes two chapters. Chapter 4 describes the corps headquarters; its capabilities, limitations, and organization; and the array of forces that it commands. Chapter 5 describes the employment of the corps and its subordinate forces in decisive action.

Chapter 4

Corps Roles and Organization

ROLES OF THE CORPS

4-1. The effective integration of landpower across the range of military operations requires an expeditionary, scalable, and operationally flexible headquarters able to exercise command in a variety of roles. The combatant commander (command authority) can use the corps as the ARFOR, joint force land component command, JTF headquarters, or as a tactical echelon.

Roles of the Corps

- As the ARFOR in a campaign or major operation.
- Joint (or multinational) force land component in a campaign or major operation.
- Joint task force headquarters in a crisis response or contingency operation.
- Tactical echelon in large-scale ground combat operations incident to a campaign.

ARMY COMPONENT (ARFOR) IN CAMPAIGNS AND MAJOR OPERATIONS

4-2. The corps headquarters is organized, trained, and equipped to serve as the ARFOR in campaigns and major operations, with command of two or more Army divisions, together with supporting theater-level organizations, across the range of military operations. As the ARFOR for the JFC, the corps serves as an operational-level headquarters, conducting land operations as the Service component. The corps can control up to five Army divisions in large-scale combat operations. The corps normally has one ESC and one medical brigade (support) in direct support. Other theater-level assets are attached as required. The headquarters of the corps allows it to adapt to operational- or tactical-level roles, depending upon the combatant commander's requirements.

4-3. In addition to operational requirements, the corps has extensive ADCON requirements as the ARFOR. When it serves as the ARFOR, the corps is responsible through the theater army commander for the Service specific support of all Army forces in the joint operations area, as well as for providing any ASOS with forces deployed in the joint operations area. As it tailors the Army forces provided to the JTF, the theater army accomplishes two things. First, the Army force package attached to the ARFOR receives the sustainment necessary to conduct land operations effectively and indefinitely. Second, the theater army relieves as much of the ARFOR requirements from the corps using theater-level units for support of the combat units within the joint operations area. The right balance allows the corps commander to retain responsibility for Service component actions while delegating as much as possible to the various theater-level commands and units.

4-4. Command and support relationships between the corps headquarters (as ARFOR) and forces provided from the theater army require the particular attention of the corps and theater army commander. There are several options. The preferred option is placing the sustainment and medical headquarters operating in the joint operations area in direct support of the corps, while the theater army attaches other units to the corps. This option allows the corps commander to set priorities for Army sustainment and support to other Services while delegating most Title 10 tasks and ASOS to these commands. Air units require centralized control of fires through the AADC, and signal units must integrate into an AOR-wide network. Therefore, these units may remain attached to the theater commands and provide direct or general support. Attachment of units—such as the civil affairs, engineers, MP, and aviation—allows the corps commander to allocate their capabilities among the divisions, multinational units, and corps troops.

4-5. The establishing directives for the JTF may allow the JFC to retain OPCON of the medical brigade (deployment support) and sustainment command by designating them as separate functional components. In this case, the corps receives general support from the functional logistics and medical functional components. This has two advantages. When the corps controls sizeable multinational forces, its ability to control operations may be stressed by multinational complications. These joint force support components allow the corps to focus on its operational responsibilities while allowing the joint sustainment command to focus on support of Army forces. The second advantage is that it allows the JFC to prioritize support provided to other functional components even though the ARFOR may have the majority of deployed personnel. The theater army augments the joint sustainment and medical command as required.

4-6. Air and missile defense units are assigned, attached, or OPCON to an AAMDC, normally operating at theater level in direct support of the AADC. Air defense brigades may defend assets within the corps area of operations. The AAMDC is responsible for balancing Army counterair and countermissile capabilities between the ground forces and the theater-level requirements specified in the JFC approved defended asset list and the area air defense plan.

JOINT FORCE LAND COMPONENT IN CAMPAIGNS AND MAJOR OPERATIONS

4-7. When designated as a joint force land component, the corps exercises TACON or OPCON over Marine Corps forces, as required by the JFC, in addition to its attached Army forces. The corps functions as an operational-level headquarters. The corps commander becomes the JFLCC when the Army provides the preponderance of land forces. Land operations achieve the campaign objectives directly through land operations or indirectly through support of other components of the joint force. Joint land operations require synchronization and integration of all instruments of national power to achieve strategic and operational objectives. Normally, joint land operations also involve multinational land forces (see paragraph 4-14). Joint land operations specifically include control of assigned areas of operations. The JFLCC employs land forces, supported by naval and air forces (as appropriate), to achieve military objectives in vital areas of the operational area. (See JP 3-31.)

4-8. The corps is an ideal joint force land component for the JFC. The corps headquarters can command joint land forces with modest augmentation from the Marine Corps. It has the necessary staff and experience to control land operations across a joint operations area. When the mission dictates, the corps headquarters identifies and fills needs for specialized skills not organic to the corps headquarters. This is particularly true in protracted operations such as a counterinsurgency. The headquarters organizes according to the JFC's implementing directive. This document establishes the roles and responsibilities of the joint force land component, assigns the mission, and designates forces. Normally, the staff consists of

corps staff, augmented with members of the other Service components. The distribution of other Service personnel onto the corps staff allocates key staff billets so that all Services share equitably in staffing tasks. Ideally, the deputy JFLCC or chief of staff comes from a different Service. Replicating this construct throughout the staff leadership ensures all leaders understand the distinct capabilities of each Service to optimize employment of the forces.

4-9. As the joint force land component, the corps headquarters normally commands two or three Army divisions and exercises TACON over Marine Corps forces made available for tasking by the JFC. As the senior Army echelon within the JTF, the corps is the ARFOR with the additional responsibility of ADCON over all attached Army forces. As required by the JFC, the corps normally receives a special operations liaison element and supports SOF throughout the land area of operations.

Note. The JFC may place the Marine Corps force under the OPCON of the corps but normally specifies TACON if the Marine Corps force is a Marine air-ground task force (MAGTF).

4-10. When designated as a joint force land component, the corps follows joint doctrine. (See JP 3-31.) As a joint force land component headquarters, the corps has tasks that include, but are not limited to—

- Advise the JFC on the proper employment of forces and capabilities.
- Develop joint plans and orders in support of the JFC's concept of operations and optimize the operations of task-organized land forces.
- Execute and assess land control operations.
- Coordinate the planning and execution of joint land operations with the other components and supporting agencies.
- Synchronize and integrate all elements of combat power in support of land operations.
- Designate the target priorities, effects, and timing for joint land operations.
- Establish a personnel recovery element to account for and report the status of isolated personnel and to coordinate and control land component personnel recovery events.
- Provide mutual support to other components by conducting operations within the joint operations area.
- Coordinate with other functional and Service components in support of achieving JFC's objectives.
- Provide an assistant or deputy to the AADC (normally provided by the AAMDC) for land-based joint theater air and missile defense operations as determined by the JFC. The JFLCC provides inputs to the JFC-approved joint area air defense plan and the airspace control plan.
- Support the JFC's information operations by developing the information operations requirements that support land control operations and synchronize land force information operations assets when directed.
- Integrate the joint and Army networks within the DOD information networks throughout the AOR. Performing this function may require joint and Service augmentation.
- Integrate special operations as required into overall land operations.
- Perform joint security functions.
- Supervise detainee operations.
- Establish standing operating procedures and other directives based on the JFC's guidance.
- Assess and as necessary restore or reconstruct civilian infrastructure.

4-11. When organizing joint forces, simplicity and clarity are critical. By providing the joint force land component a single commander for joint land operations, the JFC can enhance synchronization of operations not only between U.S. ground components, but with multinational land forces as well. Forming a joint force land component builds unity of effort, an integrated staff, a single voice for land forces and land control operations, one single concept and focus of effort for land control operations, and a synchronized and integrated land force planning and execution. The disadvantages of a single commander are that joint force land component normally retains Service component responsibilities to the JFC (requires split focus of the staff), it challenges integrating staffs, it requires more lead time to establish

headquarters before execution, and it lacks the ability to resource the staffs. (See JP 3-31 for additional doctrinal guidance on establishing the joint force land component.)

4-12. Within the joint force land component headquarters, the corps commander, deputy commander, chief of staff, and key members of the staff should be fully integrated with representation from the forces and capabilities made available to the JFLCC. Key members of the staff include the J-1, J-2, J-3, J-4, J-5, and J-6. The corps commander as the JFLCC provides the core elements of the staff to assist in planning, coordinating, and executing functional land component operations.

4-13. To facilitate joint security operations, the JFC may establish a joint security element with a designated joint security coordinator to coordinate operations in a JSA. If the JTF commander gives the JFLCC responsibility for a JSA, the corps commander may elect to split the corps headquarters responsibilities. The deputy corps commander—with part of the corps staff, augmentation from theater echelon units, and an Army MEB—receives TACON of the theater echelon units in the JSA for protection and movement. The deputy corps commander becomes the joint security coordinator. (See JP 3-10.)

> **joint security area**
> A specific surface area, designated by the joint force commander to facilitate protection of joint bases and their connecting lines of communications that support joint operations.

MULTINATIONAL LAND COMPONENT HEADQUARTERS

4-14. The associated requirement of the corps headquarters controlling U.S. land forces is as a multinational land component headquarters. The corps continues to function as an operational-level headquarters. This expands its role as a joint force land component. Only rarely will the land component be purely American in composition. In most operations, the corps exercises TACON over multinational brigades and divisions. If the corps commander exercises command over multinational forces in addition to U.S. forces, then it becomes a multinational joint force land component, and the corps commander becomes a multinational force land component commander. Command of multinational forces is complicated and politically sensitive. The higher grades structured into the design of the corps headquarters facilitate this. Commanders and staff operating as a joint headquarters must be aware that multinational brigades normally lack the ability to communicate digitally, or if they do, their systems might prove incompatible. This creates an additional layer of complexity to planning and execution. The corps also trains in multinational exercises as part of theater engagement and security assistance managed by the theater army. (See JP 3-16 and FM 3-16.)

JOINT TASK FORCE HEADQUARTERS FOR CRISIS RESPONSE AND LIMITED CONTINGENCY OPERATIONS

4-15. The corps is the preferred Army echelon for use as a JTF headquarters. A corps headquarters acting as a JTF headquarters requires a separate ARFOR because of the differing roles and responsibilities inherent in each. JTFs focus on the operational level of war and use joint rather than Army doctrine. The combatant commander may form a JTF on a geographic or functional basis, but the corps is normally a geographic JTF, commanding all forces within a joint operations area. Normally, the commander of the JTF exercises OPCON over all forces and other resources within the joint operations area. The JTF includes functional and Service components. It may also have subordinate JTFs. Once constituted as a JTF, the corps operates according to joint doctrine. (See also JP 3-33, JP 5-0, and supporting documents.)

Forming a Joint Task Force Staff

4-16. The corps headquarters needs individual augmentation to become a JTF. Identifying requirements for individual augmentation is one of the earliest tasks the corps staff performs. These individuals can be Army personnel identified and requested by the corps to fill slots in the joint manning document. For example, a corps G-8 section does not have a joint doctrinal mission, nor is it structured to man and execute the functions of a JTF comptroller section without significant augmentation. The corps staff identifies the number, skill set, type, and availability of augmentees while the JTF is still forming. This enables the headquarters to request military forces, Army civilians, representatives from other government agencies, and contractors. Frequently, individual augmentees are functional experts to chair, provide guidance, or

serve on meetings (to include working groups and boards), centers, cells, and planning teams associated with joint operations. As with other augmentation, individual augmentees may not remain throughout a campaign.

joint manning documents
Documents that identify all manpower requirements essential to the command and control of a JTF headquarters organization. Joint manning documents are created in the electronic Joint Manpower and Personnel System (known as eJMAPS) in accordance with established business rules for the use of the electronic Joint Manpower and Personnel System.

The organizational structure and size of a JTF headquarters, as reflected in the joint manning document, should be based on mission requirements, a concept of operations, the combined JTF decisionmaking process, both the supported combatant commander and combined JTF's guidance, and other factors external to the JTF headquarters control, such as an imposed maximum footprint ceiling or multinational participation. A well-balanced JTF headquarters staff should be representative of its subordinate forces and possess a thorough knowledge of their capabilities and limitations. Furthermore, the organization of the staff should be established and modified as the needs of the headquarters evolve over time.

JP 3-33

4-17. The corps headquarters needs augmentation from other Service officers and special operations personnel to transform it into a JTF headquarters. This augmentation includes officers inserted into the integrating cells, primarily the plans cell and the current operations integrating cell. This augmentation does not include the personnel needed to augment the corps headquarters battalion network capability. Additional staff augmentation would be required for each functional cell, as well as the public affairs and other personal staff sections.

4-18. When provided with the necessary joint augmentation, the JTF initiates campaign planning, deploys its early-entry command post (EECP) and advance support elements, and establishes initial command and control capabilities in the joint operations area. The JTF headquarters can initiate shaping operations and coordinate with host-nation and multinational partners in the joint operations area. As the size of the force in the joint operations area increases, the corps main command post deploys to the joint operations area, and the combatant commander provides additional augmentation. Figure 4-1 on page 4-6 provides an example of a JTF staff.

Organization

4-19. The JTF command group retains its basic Army organization with a commander, one or more deputies, a senior enlisted advisor, and several aides and personal assistants. Personal and special staff groups assist the command group with special matters over which the JTF commander wishes to exercise personal control. This group may expand to fit the circumstances, for example, personal interpreters or translators, a cultural advisor, and special liaison officers. The chief of staff supervises staff actions and serves as the principal integrator of the joint staff. The chief of staff typically oversees organizational integration, efficiency, and effectiveness by reporting through a deputy commander to the JTF commander. The JTF's mission and area of operations dictate its organization and relationship with other organizations. The composition of existing and potential adversaries, the nature of the crisis (for example, floods, earthquakes, and pandemics), and the time available to achieve the end state are factors when forming a JTF.

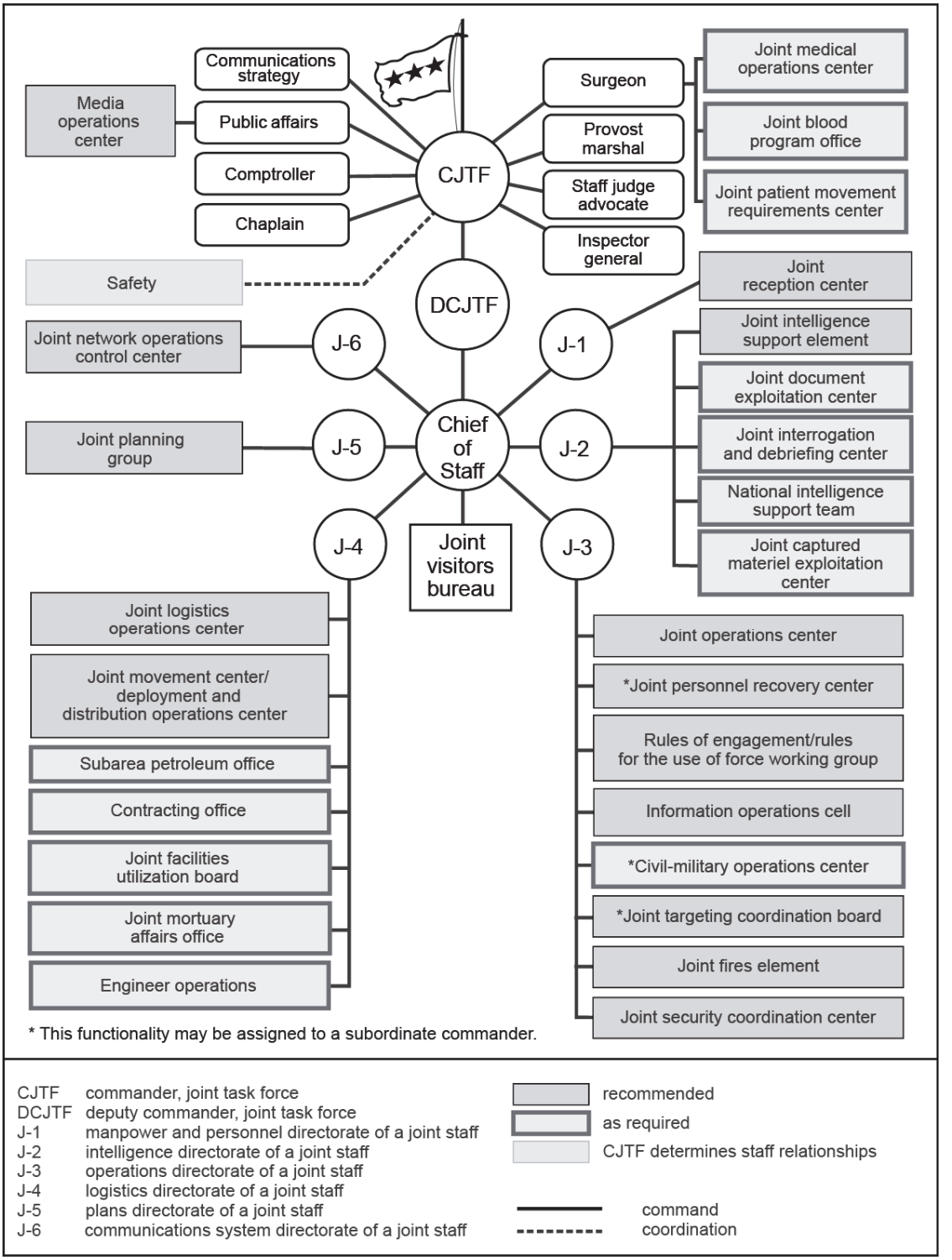

Figure 4-1. Example of joint task force staff

Joint Augmentation

4-20. Several joint organizations exist to augment the joint community in the execution of military operations. The Joint Staff tasks these organizations to provide enabling capabilities to the corps as it becomes a JTF. Many of these entities can support training exercises as resources allow. Some joint enabling capabilities are self-supporting, while others require support from the supported headquarters. (See JP 3-33.) These joint organizations include—

- The joint communications support element that provides rapidly deployable, en route, early-entry, and scalable command, control, communications, computer, intelligence, surveillance and reconnaissance capabilities across the range of military operations. This element facilitates rapid establishment of joint force headquarters and bridges joint requirements for such capabilities.
- A national intelligence support team that provides a national-level, deployable, all-source intelligence team to the JTF.
- The Defense Threat Reduction Agency that provides subject matter expert augmentees to counter CBRNE.
- The Joint Information Operations Warfare Command that augments JTF planning, coordinating, and executing efforts for the joint information operations community.
- The Joint Personnel Recovery Agency that coordinates and executes personnel recovery.
- The joint public affairs support element that provides a ready, rapidly deployable joint public affairs capability to combatant commanders to facilitate rapid establishment of joint force headquarters, bridge joint public affairs requirements, and manage public affairs training to meet theater information challenges.
- Defense Logistics Agency contingency support teams that deploy or support the JTF.
- The deployable joint command and control system that provides the JTF with tools for planning, executing, and assessing joint operations.
- The joint fires integration and interoperability team that provides rapidly deployable battlefield assessment teams to augment large-scale training exercises and operational deployments to gather data on planning, preparing, and executing joint fires.
- The joint systems integration center that provides operational and technical expertise and technology to augment joint command and control capabilities as well as to solve joint interoperability problems, focusing at the JTF level.
- The joint enabling capability command that augments the JTF with a mission-tailored, joint capability package to facilitate the rapid establishment of a JTF headquarters.
- The joint planning support element that enables the JTF headquarters to rapidly form, plan, operate, and integrate with interagency and nonmilitary instruments of national power for crisis resolution.

Training

4-21. Each option for forming the JTF requires staff with specific military skill sets and training levels. One important requisite skill set is the staff's proficiency with joint command and control systems, networks, and software applications. The corps headquarters is equipped with various Army mission command systems so the staff can train on them. However, the respective echelon headquarters coordinates with the geographic combatant command to gain access to joint command and control capabilities for command post training. The division tactical command post, corps EECP, or theater army contingency command post can and should deploy as part of a joint rapid deployment exercise. The headquarters can also exercise in simulation as the core element of a JTF for limited interventions. It should also provide augmentation as a staff plug to another Service headquarters tasked to form a JTF headquarters as part of an exercise. Each opportunity to participate in joint exercises increases the experience of the corps staff and builds knowledge that the corps staff can incorporate in unit standard operating procedures and contingency plans.

4-22. An effective training program involves the corps in joint exercises with access to joint command and control systems. The deployable joint command and control suite of equipment for each geographic combatant command provides a rapidly deployable, scalable, modular command post suite.

Reconfiguration of the deployable joint command and control system allows for rapid response and en route communications capabilities if required. Deployable joint command and control provides a standardized command post with full joint command and control capabilities. These capabilities include the servers, workstations, and satellite uplinks to support the Joint Worldwide Intelligence Communication System (known as JWICS), global mission network, nongovernment organizations, SECRET Internet Protocol Router Networks (known as SIPRNETs), Nonsecure Internet Protocol Router Networks (known as NIPRNETs), the Global Command and Control System-Joint, and other collaborative information environment and communications capabilities.

TACTICAL ECHELON IN LARGE-SCALE COMBAT OPERATIONS

4-23. Very large combat operations require the corps headquarters to function as a tactical land headquarters under a multinational force land component or subordinate to a field army equivalent established under an alliance. This is the original purpose of the Army corps and the role performed by Army corps in both Operation Desert Storm and Operation Iraqi Freedom I. Today, a corps could serve as a tactical land headquarters if war recurred on the Korean peninsula, or if a future crisis led to a general war. In this case, the corps would operate within a mature theater of war as a tactical headquarters under a joint or multinational land command. Figure 4-2 illustrates an Army corps in this role.

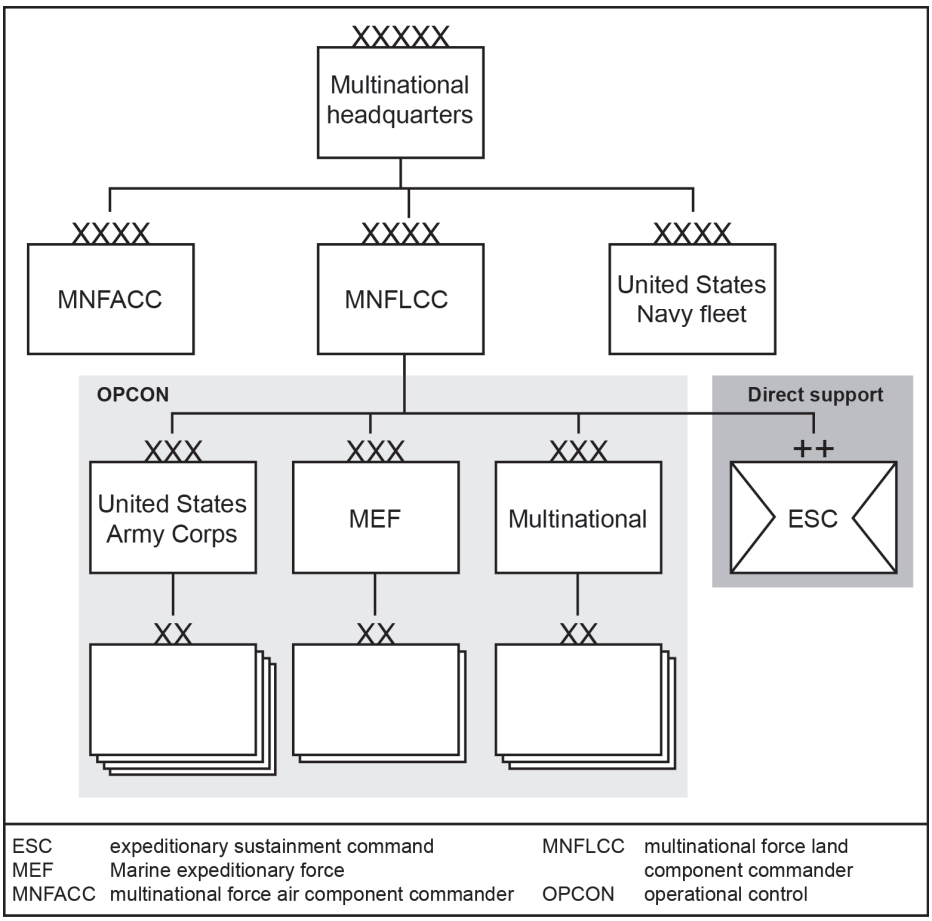

Figure 4-2. The corps as a tactical headquarters

LIMITATIONS

4-24. Although the corps is a large and robust headquarters, its commander's ability to exercise mission command has limits. The corps may command up to five U.S. divisions and supporting units. However, if

the corps commands a multinational division (or its equivalent) outside a formal military alliance such as the North Atlantic Treaty Organization (NATO), then the span of control diminishes.

4-25. The ESC and medical brigades are not normally attached or OPCON to the corps. Therefore, the corps staff pays particular attention to identifying and coordinating support provided by these commands. When fully coordinated, the sustainment and medical commands provide effective and efficient support to the corps. However, responsibilities for terrain management, area security, and priorities for movement within areas of operations are inherently the corps commander's responsibilities. These responsibilities require continuous coordination among the corps headquarters and its supporting commands.

4-26. The corps main command post has limited mobility and no organic security. The tactical command post is fully mobile, but has no organic security. Deployment of the corps main command post is lift-intensive and requires careful integration into the deployment sequence. Once deployed, the corps headquarters battalion normally receives an attached security company, such as a reinforced MP company.

SUBORDINATE FORCES

4-27. There is no standard configuration for the modular corps echelon. Almost every type of Army unit may be task-organized under the corps headquarters. The primary function of the corps is to command Army divisions in combat. In addition to the divisional units, the corps may command BCTs and several different types of multifunctional and functional brigades. Other units provide direct or general support. The corps attaches smaller, more specialized units as needed. Chapter 5 discusses task organization of the corps.

4-28. When tailored for major operations, the corps becomes very large. Figure 4-3 on page 4-10 provides an example of a corps tailored for major operations. In this example, the corps commands three Army divisions and 28 brigades as well as and various detachments and smaller units. An ESC and a MEDCOM (DS) provide sustainment with another five brigades. The corps receives direct support from signal and air defense brigades commanded by the theater signal command and AAMDC respectively. The corps commander uses the brigades under corps command to reinforce the divisions and to conduct shaping operations for subordinate units. These brigades also support the corps as a whole. In a limited contingency operation or crisis response, the corps commands a much smaller force.

4-29. The corps routinely commands multinational forces. The organization of these units varies as will their support and sustainment capabilities. The corps commander should give particular attention to the national capabilities and limitations of each multinational partner. Some limitations are tactical, while others may be political. (Refer to FM 3-16.)

DIVISIONS

4-30. Divisions are the Army's primary tactical warfighting headquarters. Divisions can control up to five BCTs in major combat operations. They can control more BCTs in protracted stability operations. A division force package may include any mix of armored, infantry, and Stryker BCTs. In addition to BCTs, each division controls a tailored array of multifunctional support brigades and functional brigades. Since divisions have no organic structure beyond the headquarters, all types of brigades may not be present in an operation. In some operations, divisions may control multiple brigades of the same type. They may also control functional groups, battalions, or separate companies; however, these are normally task-organized to a brigade. The important point is that division organizations vary for each operation. The division is the primary headquarters for the employment of brigades.

SUPPORTING COMMANDS

4-31. The theater army provides direct and general support to the corps. As the joint force land component and ARFOR, the corps normally receives direct support from an ESC and a medical brigade (support). Other theater commands and brigades provide general support in addition to any units attached to the corps. For example, the AAMDC may place one of its assigned brigades in direct support to the corps. This brigade then is responsible for providing air and missile defense for the corps commander's priorities

(defended asset list). The parent unit (the AAMDC) retains OPCON, while the regional or sector air defense commander exercises TACON of this brigade for direction of fires.

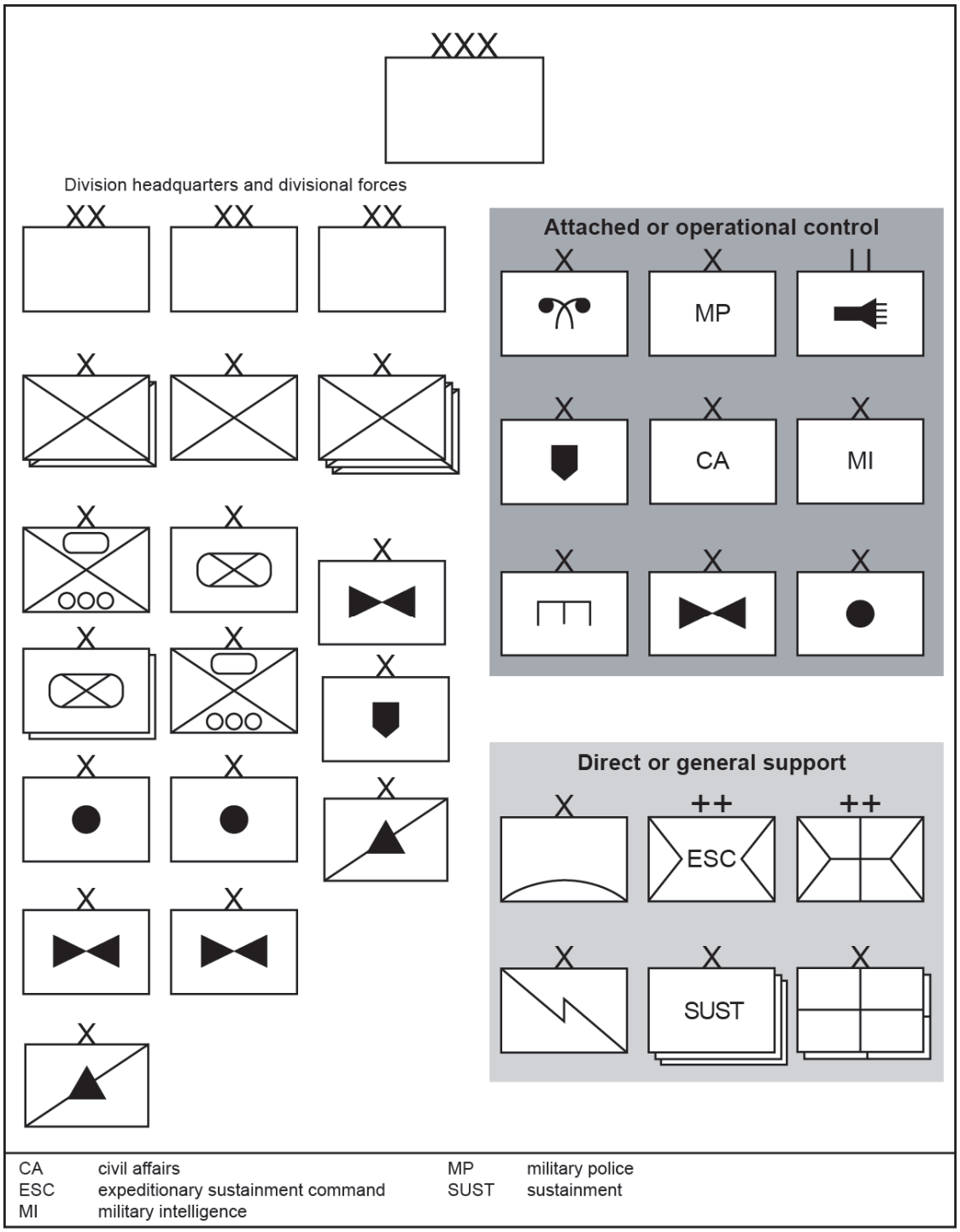

Figure 4-3. An example of headquarters and units task-organized under the corps

SUPPORTING BRIGADES AND OTHER FORCES

4-32. The Army force package includes a mix of BCTs, multifunctional brigades, and functional support brigades as well as specialized units. The corps normally task-organizes the divisions with a mix of BCTs and multifunctional support brigades. Depending upon the situation, the corps may retain OPCON of one or more BCTs for security operations or as a reserve. (See chapter 5.) Specialized units such as a civil affairs brigade may be attached to the corps headquarters and their subordinate battalions task-organized with the divisions. Figure 4-4 illustrates the various types of modular brigades.

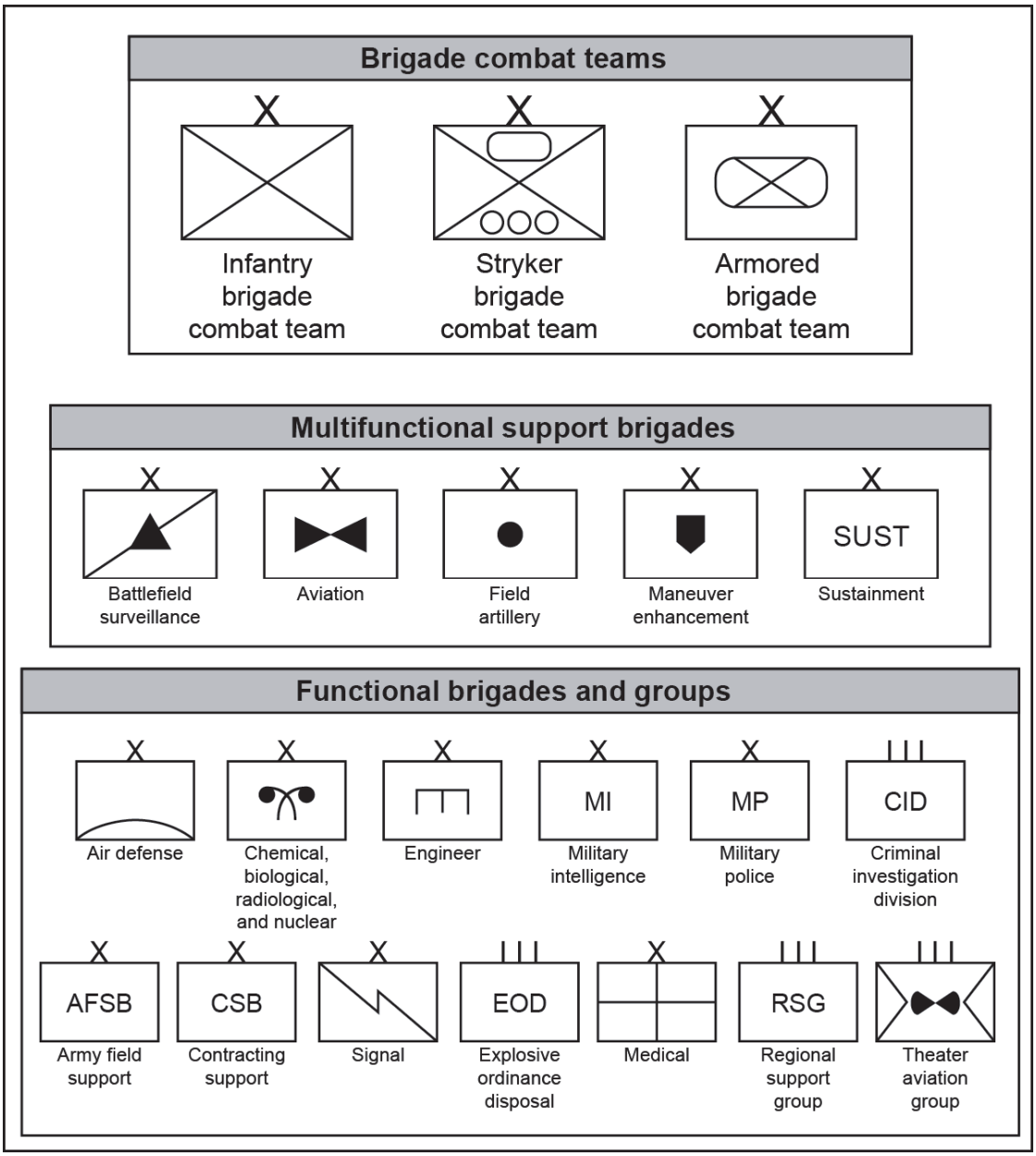

Figure 4-4. Modular brigades and groups

4-33. Normally the multifunctional support brigades are attached or OPCON to a division headquarters. However, any of the brigades may be attached to a corps or theater-level command, or they may be under OPCON to a joint functional component commander (for example, the JFACC), to another Service

headquarters (for example, a Marine expeditionary force), or to a multinational headquarters. When operating under the control of the JFC, another Service, or a multinational force, the ARFOR commander exercises ADCON over that multifunctional support brigade. (For additional detail on BCTs and multifunctional support brigades, see chapter 6.)

THE CORPS HEADQUARTERS

4-34. The corps headquarters consists of four constituent parts: a main command post, a tactical command post, a mobile command group, and a HHB. The composition of the corps headquarters allows the corps commander and chief of staff great flexibility to structure the organization according to the demands of the situation.

MAIN COMMAND POST

4-35. The main command post controls current operations, performs detailed analysis, and plans future operations. The main command post includes the command group and most of the coordinating, special, and personal staff. The staff organizes into five functionally focused cells (intelligence, movement and maneuver, fires, protection, and sustainment) with broad responsibilities for coordinating these warfighting functions across the corps. The movement and maneuver staff organizes further into the three integrating cells—current operations integration cell, future operations cell, and plans cell. The integrating cells include subject matter experts from across the entire staff. The movement and maneuver cell includes several specialized elements such as airspace control. It also absorbs U.S. Air Force elements such as the joint air component coordination element. (See discussion beginning in paragraph 5-41.) Because there is no mission command functional cell, staff elements responsible for mission command tasks either receive direction and priorities from the chief of staff or work within an integrating cell. Liaison elements from higher, adjacent, and subordinate units locate at the main command post. If provided, the SOF coordinating element locates here. See figure 4-5.

4-36. Although the corps main command post can operate from a field location, the preferred location for the corps main command post is a permanent structure such as an unused warehouse or office complex, augmented by field shelters as required. The ideal location for the main command post is often a forward operating base located near the division main command posts and the supporting commands. Whenever possible, the main command post should be within a short driving distance of a fixed-wing capable airstrip. Once emplaced, the main command post normally remains in place for the duration of that phase of the campaign.

4-37. The size and importance of the main command post create security challenges. Protection emphasizes both active and passive measures, including a designated security force, air and missile defense, access control, dispersion, and hardening of facilities.

TACTICAL COMMAND POST

4-38. The tactical command post is mobile and more easily deployed or displaced since most of its transportation is organic. The tactical command post can control corps operations for a limited time and form the nucleus of a forward-deployed early-entry command post (sometimes designated as an assault command post). In a protracted campaign where operations are decentralized and divisions focus on lines of effort rather than maneuver, the tactical command post normally co-locates with the main command post and may reinforce the main command post staff. On the other hand, it may remain organized as a separate command post to facilitate rapid displacement and function as an alternate command post. See figure 4-6 on page 4-14.

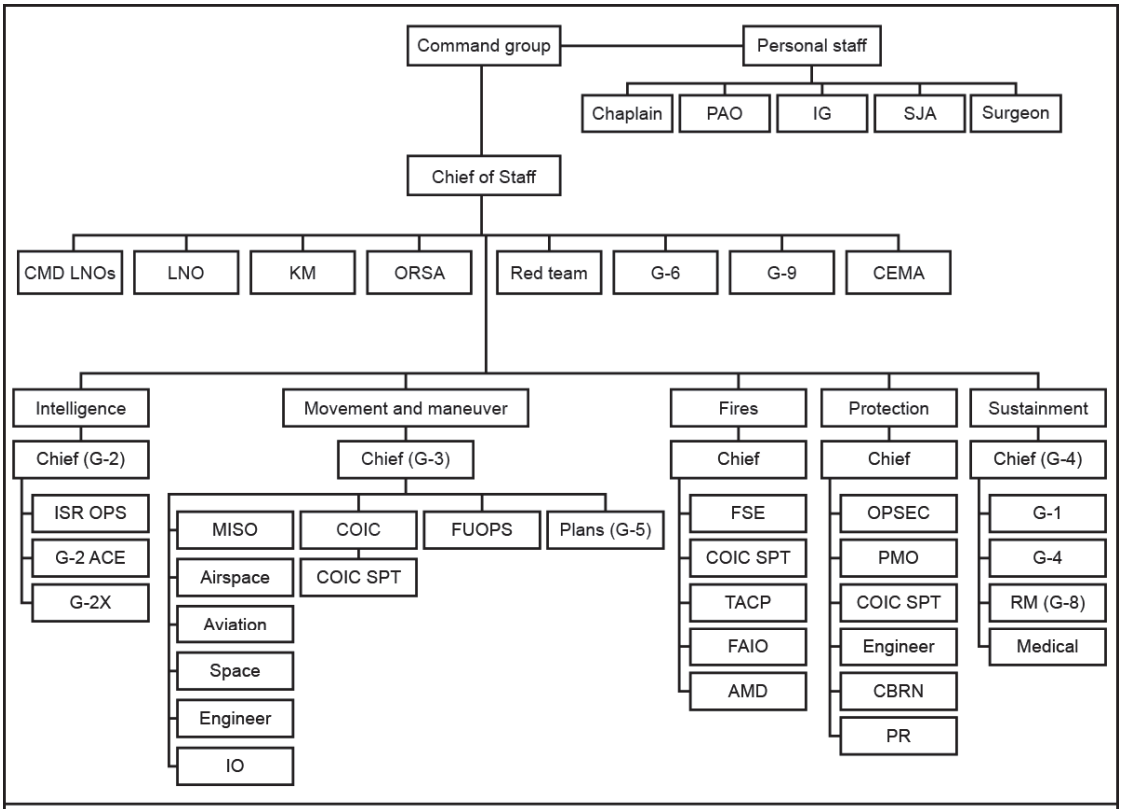

ACE	analysis and control element	G-9	assistant chief of staff, civil affairs operations
AMD	air and missile defense	IG	inspector general
AT	antiterrorism	IO	information operations
CBRN	chemical, biological, radiological, and nuclear	ISR	intelligence, surveillance, and reconnaissance
CEMA	cyber electromagnetic activities	KM	knowledge management
CMD	command	LNO	liaison officer
COIC	current operations integrating cell	MISO	military information support operations
FAIO	field artillery intelligence officer	OPS	operations
FSE	fire support element	OPSEC	operations security
FUOPS	future operations	ORSA	operations research and systems analysis
G-1	assistant chief of staff, personnel	PAO	public affairs officer
G-2	assistant chief of staff, intelligence	PMO	provost marshal office
G-2X	assistant chief of staff, human intelligence	PR	personnel recovery
G-3	assistant chief of staff, operations	RM	resource management
G-4	assistant chief of staff, logistics	SJA	staff judge advocate
G-5	assistant chief of staff, plans	SPT	support
G-6	assistant chief of staff, signal	TACP	tactical air control party
G-8	assistant chief of staff, financial management		

Figure 4-5. The corps main command post

4-39. When the tactical command post is an alternate command post, the corps deputy commander may deploy with it to supervise the operation, exercising those command authorities specifically delegated by the corps commander. The deputy G-3 usually acts as the tactical command post's operations officer. The deputy G-3 is responsible for establishing and coordinating the activities of the current operations integrating cell and future operations cell, if manned. The G-5 may provide a dedicated planning element to the tactical command post. Normally the cell and section chiefs for the tactical command post are deputies of the coordinating staff officers or functional cell chiefs. Sometimes they are officers with required special expertise peculiar to the operation or line of effort controlled by the tactical command post. Unless employed for an extended period, the tactical command post does not manage planning or transitions from plans to operations.

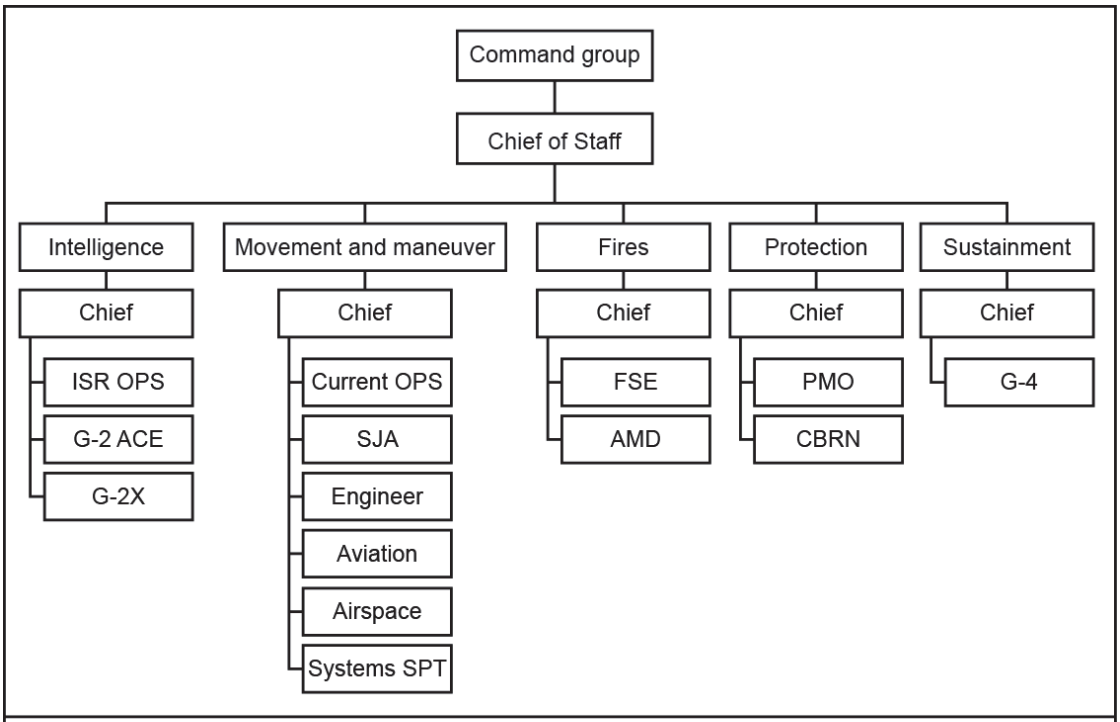

ACE	analysis and control element	G-4	assistant chief of staff, logistics
AMD	air and missile defense	ISR	intelligence, surveillance, and reconnaissance
CBRN	chemical, biological, radiological, and nuclear	OPS	operations
FSE	fire support element	PMO	provost marshal office
G-2	assistant chief of staff, intelligence	SJA	staff judge advocate
G-2X	assistant chief of staff, human intelligence	SPT	support

Figure 4-6. Example of corps tactical command post

4-40. The primary role of the tactical command post is as the alternate command post of the corps. It provides a place from which the commander can exercise mission command while the main command post deploys or displaces. In a high-threat situation, the tactical command post may offset from the main command post to provide redundancy in the event of an attack on the main command post. Commanders can also employ it as—

- A task force headquarters.
- The controlling command post for a distinct operation within a phase.
- The controlling headquarters for a distinct portion of the corps area of operations.
- A forward-positioned headquarters during deployment.
- The controlling headquarters for a JSA.

4-41. First, commanders can employ the tactical command post as a task force headquarters that temporarily controls a named operation. The tactical command post functions as a major subordinate command, providing staff support and command post facilities to support the task force commander. The corps deputy commander may conduct the operation. For example, the corps may conduct a large military deception operation with several brigades, while the bulk of the corps displaces.

4-42. If the concept of operations envisions a significant shaping operation, such as a demonstration or retrograde, then the corps commander may employ the tactical command post as the controlling headquarters for that distinct operation. The main command post controls the majority of the corps while the tactical command post controls forces in a named, distinct operation.

4-43. Commanders can also employ the tactical command post as the controlling command post for a portion of the area of operations within which the predominant tasks or mix of forces differs sharply from that of the remainder of the corps. For example, a multinational division may be conducting stability tasks and security operations in its area of operations and the corps provides supporting brigades and other U.S. capabilities. The tactical command post moves to that area of operations to facilitate employment of U.S. brigades and supporting capabilities.

4-44. Commanders employ the tactical command post as a forward-positioned headquarters when the corps is a tactical headquarters. In this role, the corps tactical command post locates in or near a committed division's area of operations. It may also position itself near a multinational division to provide more extensive coordination and network capability than a liaison detachment.

4-45. Lastly, commanders can also employ the tactical command post as the controlling headquarters for a JSA when the joint command and control requirements exceed the span of control of the MEB.

4-46. Displacing the tactical command post requires transportation assets, initially with intertheater airlift, and subsequently with intratheater assets. The tactical command post should be strategically deployable by a minimum number of C-17 aircraft. Once in theater, the tactical command post should need minimal RSOI before becoming functional. By adjusting the vehicle and equipment mix, the tactical command post reconfigures for movement by C-130 aircraft to forward locations.

EARLY-ENTRY COMMAND POST

4-47. The corps tactical command post can provide an EECP when the mission dictates. Ideally, manning and equipment should allow the EECP to deploy aboard a single aircraft, although the composition adjusts to the lift available. It should be 100 percent mobile and provide en route planning and rehearsal capability. The function of the EECP is to act as the advance element of the corps headquarters. It includes network specialists, drivers, and selected personnel from the current operations integrating cell, and normally the deputy corps commander leads it. One or more aircraft from a subordinate aviation brigade may augment the EECP if support facilities are available. Security for the EECP comes from co-location with a subordinate unit's command post already deployed into the joint operations area. If the environment is benign, the EECP may deploy to a host-nation military facility.

4-48. The EECP serves as the eyes and ears of the corps commander during the initial deployment of the corps. It normally does not exercise TACON over the entry operation. That is the responsibility of the assault or entry echelon commander, normally the lead division commander. During most deployments, the corps commander remains at home station with the main command post until the tactical command post arrives and the EECP merges with the tactical command post. The corps commander delegates authority to the deputy commander to adjust the corps plan as needed based upon on-the-spot coordination with committed commanders. The EECP may also coordinate with military and other government organizations based on the existing situation. If the theater army has deployed its contingency command post, the corps EECP may move to that location to facilitate transition from the theater army to corps command of the operation.

MOBILE COMMAND GROUP

4-49. The mobile command group consists of specially equipped vehicles that allow the corps commander to move by ground within the land portions of the joint operations area and have network access to the common operational picture, subordinate commanders, and the corps staff. In addition to the drivers and gunners, the commander normally selects a handful of staff experts to handle en route communications and coordination. A supporting aviation brigade has specially equipped helicopters that can substitute for the vehicles when distance requires air movement.

PLANNING FOR COMMAND POST EMPLOYMENT

4-50. When circumstances require each of the corps command posts to operate in a separate area, the corps staff and headquarters battalion staff develops plans for their security, sustainment, and communications.

The commander, deputy commanders, chief of staff, G-3, and G-6 should consider factors related to transportation, endurance, security, communications, and the exercise of mission command.

4-51. Movement of the various corps command posts is a function of transportation means and capacity. The main command post requires considerable external transportation support to move. Once displaced, the main command post requires time to set up facilities, establish network communications, and correct connectivity problems.

HEADQUARTERS AND HEADQUARTERS BATTALION

4-52. The only troops organic to the corps are in the headquarters battalion. The HHB has four subordinate companies as shown in figure 4-7. The battalion provides communications, transportation, and medical support to the corps headquarters. The battalion's personnel and equipment support the main command post, tactical command post, and mobile command group. The battalion provides administrative (including the Uniform Code of Military Justice) and life support to the additional resources assigned or attached to the corps headquarters—such as a band, security assets, and joint or interagency augmentation—as required. The subordinate elements of each company report to the company chain of command. The company commander, in turn, reports to the headquarters battalion commander. The battalion command group provides supervision and exercises administrative command functions over personnel assigned to the corps headquarters. It consists of a commander, executive officer, command sergeants major, rear detachment commander, rear detachment noncommissioned officer, and a vehicle driver. The battalion commander also serves as the headquarters commandant for the corps headquarters.

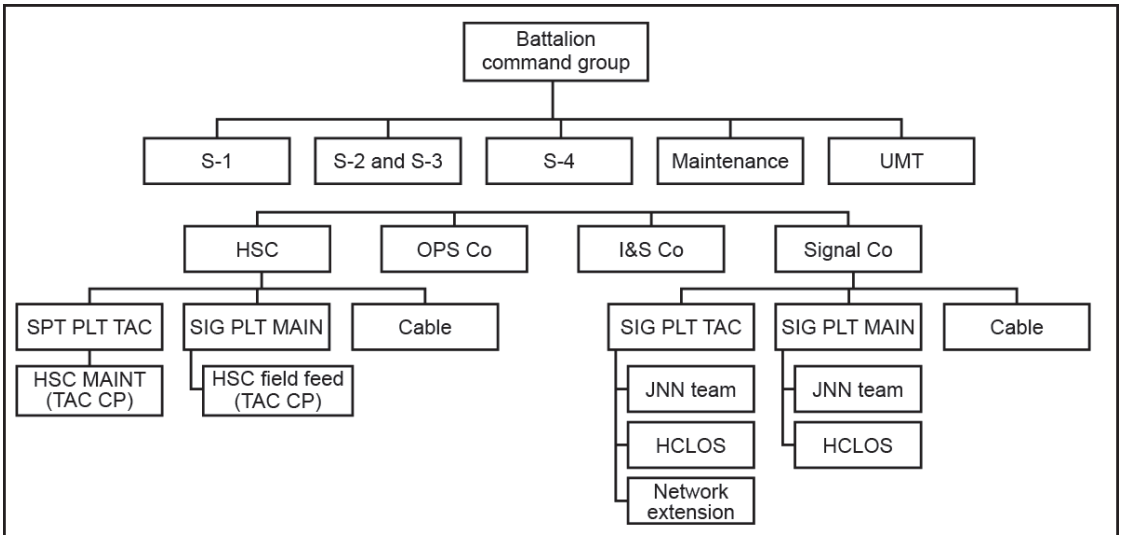

Co	company	S-1	battalion manpower and personnel staff officer
CP	command post	S-2	battalion intelligence staff officer
HCLOS	high-capacity line of sight	S-3	battalion operations staff officer
HSC	headquarters support company	S-4	battalion logistics staff officer
I&S	intelligence and support	SIG	signal
JNN	joint network node	SPT	support
MAINT	maintenance	TAC	tactical
OPS	operations	UMT	unit ministry team
PLT	platoon		

Figure 4-7. The headquarters and headquarters battalion of the corps

4-53. The headquarters battalion staff consists of five staff sections. They provide administrative support, human resources, logistics support, religious support, and life support to corps headquarters elements in garrison and the field. When deployed, the battalion staff sections are responsible for unit-level communications support, property accountability, transportation, and medical, food service, and maintenance support for the main command post, tactical command post, and mobile command group.

4-54. The headquarters support company contains all members of the headquarters battalion staff. The headquarters support company has two sections. One section supports Soldiers at the main command post and one section supports the tactical command post. This company can split support between the tactical command post and an EECP if required. The medical treatment section provides medical care for the corps main command post personnel as well as emergency and advanced trauma management to main and tactical command post personnel. It also provides sick call services, medical surveillance and preventive medicine, and unit-level ground and en route patient care.

4-55. The operations company (A Company) provides company-level administrative and logistics support to Soldiers in the movement and maneuver, protection, and fires warfighting function cells. The headquarters battalion commander may direct the operations company headquarters to provide additional support to the tactical command post.

4-56. The intelligence and sustainment company (B Company) provides company-level administrative and logistics support to the Soldiers in the intelligence cell and the sustainment cell, as well as the tactical command post elements of these cells. It also provides specialized communications support (such as Operation Trojan Spirit) to the corps intelligence sections. When the tactical command post deploys, the HHB commander may direct the headquarters support company to provide additional support to the tactical command post.

4-57. The signal company (C Company) provides network and communications support to the corps headquarters. It includes platoons that directly support the corps main and tactical command posts. The signal company headquarters provides logistics support to the signal company. The company receives maintenance support from the headquarters battalion. The company headquarters oversees installation and operation of support for the main and tactical command posts including network, radio (line-of-sight and satellite communications), wireless network extension, wire, and cable. Each support platoon provides communications support using the Warfighter Information Network-Tactical (known as WIN-T) to connect user devices such as telephones and computers. The two platoons have nearly identical capabilities to provide terrestrial and space-based communications support to each command post. Platoon capabilities include secure tactical defense switched network voice, SECRET Internet Protocol Router Networks (known as SIPRNETs), Nonsecure Internet Protocol Router Networks (known as NIPRNETs), Joint Worldwide Intelligence Communications System, and video teleconferencing. The tactical command post has the wireless network extension teams for extended frequency modulation retransmission. The platoon cable section provides support to the main and tactical command posts on a mission basis.

This page intentionally left blank.

Chapter 5
Corps Operations

OPERATIONS AT THE CORPS LEVEL

5-1. The corps headquarters is the most versatile of the echelons above brigades. It may become a joint and multinational headquarters responsible for conducting deterrence, crisis response, and limited contingency operations. In campaigns and major operations, the corps commands multiple divisions and attached brigades, serves as the land component, and serves as the operational-level headquarters for the employment of landpower. The corps headquarters participates in multinational exercises designed to improve OPLANs and theater security in each of the geographic combatant commands.

5-2. The corps commander synchronizes the employment of joint capabilities in conjunction with Army decisive action. Corps operations shape an operational environment and set the conditions for tactical actions by the division and lower echelons. In combat operations, the corps task-organizes and maneuvers divisions to destroy enemy land forces, seize key terrain and critical infrastructure, and dominate the land portion of the joint operations area. In protracted campaigns dominated by stability tasks or a foreign humanitarian crisis, the corps commander integrates Army operations with those of host-nation forces, other government agencies, and nongovernment agencies across multiple lines of effort.

5-3. Chapter 5 focuses on the corps as a joint force land component and ARFOR, or as a tactical headquarters. The corps can and will become a JTF headquarters; however, its operations as a JTF are governed by joint doctrine, specifically JP 3-33. When designated as a joint force land component, the corps modifies its operations and organization per JP 3-31. When the corps also serves a multinational force land component, it follows doctrine prescribed in JP 3-16 and FM 3-16.

5-4. The corps is normally the highest Army echelon deployed to a joint operations area. It commands joint, Army, and multinational land forces in campaigns and major operations. The distinguishing aspects of corps operations are their scope and scale. Normally, the corps exercises OPCON over two or more U.S. Army divisions and a variety of supporting brigades, exercises TACON over various multinational units and United States Marine Corps units, and is supported by various theater sustainment organizations. As a land component headquarters, the corps becomes the bridge between the operational and tactical levels. Mission command at this echelon requires operational art, tactical expertise, and complementary employment of the warfighting functions, with special emphasis on sustainment. The corps commander and staff need to understand joint capabilities and use them to the maximum extent feasible throughout the campaign.

OPERATIONAL ART

5-5. Planning horizons are much longer at the corps level than for the division. Corps-sized operations rarely take less than a week and may require several months to achieve a campaign objective. The corps commander shapes throughout an operational environment to set the conditions for the tactical success of subordinate divisions. In practice, this means that the corps is shaping and sustaining in preparation for the next phase of operations, while the divisions are conducting tactical shaping and the decisive operation within the current phase. Because the corps operates at the nexus of operational and tactical levels, the ability of the corps commander to influence current operations is more limited than that of the subordinate division commanders. The commander can shift joint capabilities and alter the boundaries between divisions relatively quickly. Changing task organization, committing the corps reserve, and modifying lines of operation and sustainment priorities take time and intensive staff coordination. The corps commander anticipates requirements, requests joint capabilities, and repositions forces and resources for the next phase of operations. The corps staff coordinates with higher, adjacent, and subordinate headquarters to ensure that plans and tactical conditions for the next phase of operations are set.

5-6. The scale of corps operations is much greater than that of division and brigade operations. The corps commander and staff need to understand and master operational reach, and understand the related elements of operational art—culmination, basing, lines of operation, and tempo. *Operational reach* is the distance and duration across which a joint force can successfully employ military capabilities (JP 3-0). As a land component, the corps assumes responsibility for the land portion of the joint operations area. That area can extend over thousands of square kilometers. The corps commander and staff think of distance in terms of time and resources. They consider how long it takes to move by ground from one point to another in the corps area of operations for a brigade or a division. They determine the assets needed to support movement in the corps area of operations. They consider how long it takes for different types of aircraft to transit the same distance.

5-7. Operational reach is relative; it requires careful analysis of the enemy's capabilities compared with friendly forces. This consideration becomes particularly important as the corps' combat power becomes widely dispersed, typical in offensive exploitation and stability-intensive area of operations. The commander estimates the risks to friendly forces as the distance between subordinate forces increases. The point at which the enemy (or the civil situation in the case of stability tasks) has the potential to overwhelm committed units before other joint and Army forces can intervene marks the culminating point. By employing all available joint capabilities such as intratheater airlift, and shifting boundaries, forces, and priorities, the corps commander extends the operational reach of the corps. The corps commander needs to implement each decision in time to alter the corps posture before the divisions reach their culminating point. The corps can limit the effects of time and distance by carefully phasing the operation when its scope and scale make culmination likely. This allows the joint or multinational land component to retain and exploit the initiative.

ANALYSIS OF AN OPERATIONAL ENVIRONMENT

5-8. As an operational-level headquarters, the corps commander visualizes, describes, and directs its subordinate echelons, based on its understanding of an operational environment from their vantage point. The corps shapes and sets conditions for success. This demands a comprehensive analysis of the operational variables (sometimes called PMESII-PT). Corps staffs should thoroughly understand the operational variables and describe those variables to the tactical echelons. The tactical echelons can then translate those operational variables identified by the operational headquarters into the mission variables (sometimes called METT-TC).

DEPLOYMENT OF A CORPS

5-9. The corps headquarters and the forces that make up the corps normally deploy from the CONUS as part of joint force projection. USTRANSCOM manages joint force projection in accordance with priorities developed by the geographic combatant command. Force projection is the military component of power projection. It is a central element of the national military strategy. Speed is paramount; force projection is a race between friendly forces and the enemy or situation. The side that achieves an operational capability first can seize the initiative. The goal is a combat-ready force deployed to an operational area before the enemy is ready or the situation deteriorates further.

5-10. Corps commanders visualize force projection as one seamless operation. Deployment speed sets the initial tempo of military activity in the operational area. Commanders understand how speed, sequence, and mix of deploying forces (tailoring) affect their employment options. They see how their employment concept establishes deployment requirements. The theater army develops a recommended deployment sequence for Army forces into the AOR. However, the corps has an active and collaborative role in the tailoring process. During planning, the corps commander recommends to the theater army commander a proposed mix of forces and their arrival sequence that best supports the future operations of the corps. If the corps commander and theater army commander focus only on the land component, to the exclusion of complementary joint capabilities, they may not achieve the correct force sequencing. Commanders exercise active and continuous control during force projection.

5-11. Force projection encompasses five processes: mobilization, deployment, employment, sustainment, and redeployment. These processes occur in a continuous, overlapping, and repeating sequence throughout an operation. Each process has its own criteria. Mobilization is the process of bringing the armed forces to

a state of readiness in response to a contingency. Deployment is the relocation of forces and materiel to a desired operational area in response to a contingency. It has four supporting components: pre-deployment activities, fort to port, port to port, and RSOI. Employment is the conduct of operations to support a JFC. Sustainment involves providing and maintaining personnel and materiel required to support a JFC. Redeployment is the return of forces and materiel to the home or demobilization station. (See JP 3-35 and FM 3-35.)

5-12. The theater army is responsible for coordinating RSOI of arriving Army forces. This responsibility normally is delegated to the TSC. The ESC or other sustainment headquarters supporting the corps reassembles deploying units and quickly moves them into staging areas. The corps assumes OPCON of units as they complete integration of personnel equipment and unit logistics and the TSC releases the unit. Even as the units complete RSOI, the corps ensures that unit commanders and key leaders are fully briefed on the situation and their subsequent missions. Effective RSOI establishes a smooth flow of personnel, equipment, and materiel from ports of debarkation through employment as reassembled, mission-capable forces. A deploying unit is most vulnerable between its arrival and operational employment, so protection is vital. If the corps is conducting operations while major subordinate units are still arriving, the corps commander may employ the corps tactical command post as the corps' interface with the ESC and arriving forces at the port of debarkation.

5-13. The corps commander can influence—but not dictate tailoring of—the corps' subordinate units. The combatant commander, theater army, supporting combatant commands, USTRANSCOM, and FORSCOM all make decisions concerning the composition and deployment sequence of the corps. The corps commander, can, however, organize and prepare the corps command posts for efficient and effective movement throughout the deployment. By selecting personnel with the right skill sets and providing the right mix of equipment, the commander, chief of staff, and G-3 match corps capabilities with the requirements at home station and in the joint operations area. Four areas require particular consideration:

- RSOI involves USTRANSCOM, the theater army, the TSC, the ESC, and gaining headquarters. As early in the deployment sequence as feasible, the corps deploys a command post—EECP then tactical command post, in sequence, or if lift is available, the entire tactical command post—to oversee the initial arrival and deployment of the corps. Unless the deployment involves forcible entry, the EECP should be one of the first deploying elements of the corps.
- Organization of the corps command posts should factor both the mission command requirements and endurance. Commanders factor in the number of requirements each command post controls and the duration corps command posts are required to control corps forces.
- Each deployment will differ. The corps commander should determine when personal presence in the joint operations area would be required. For planning purposes, the corps commander can influence deployment more effectively from the corps main command post at home station than in an austere facility in the reception area. The earliest the corps commander should deploy is when elements of two divisions and their command posts are operational. Before that, the corps EECP or tactical command post with the deputy commander should suffice.
- The mission support element permanently based at the corps' home station should serve as the corps main command post during the period when the main command post begins to deploy until the main command post completes RSOI. The chief of staff designates individuals who work from the home station location and deploy late in the sequence. This facilitates control during deployment and handover of any ongoing responsibilities such as support to other geographic combatant commands.

TASK-ORGANIZING THE CORPS

5-14. The task organization of the corps is the foundation of mission command. It determines which commander works for or supports which commander. It states who exercises mission command and who operates under it. It also provides the limits of mission command in terms of further organizational changes and the degree of control exercised by each commander. (See ADRP 5-0 for discussion of Army command and support relationships.)

5-15. The theater army tailors the Army force package provided to the JFC according to the broad requirements of the campaign; the corps task-organizes it according to operational requirements within the

joint operations area. The corps staff collaborates with the theater army staff insofar as ensuring that the tailored force package mirrors the initial corps task organization. The theater army commander accomplishes several things through the tailoring. First, through tailoring, the theater army determines the sequence of deployment for the Army force package, including the corps headquarters. This provides the corps with a projection of what forces are available and when those forces should complete RSOI. The tailored force package mirrors the initial task organization of the corps as closely as deployment requirements allow. Second, tailoring determines the initial ADCON responsibilities for the corps as the ARFOR. The Secretary of Defense attaches deploying Army forces to a gaining geographic combatant command. The theater army receives attachment of these forces and retains control of them until they complete deployment and RSOI. With the JFC's concurrence, the theater army *attaches* Army forces to the gaining ARFOR headquarters. Army attachment conveys operational and administrative responsibility for the subordinate force, thus ADCON follows the subordination established by attachment.

Note. The theater army normally retains attachment of sustainment and medical units through the TSC and MEDCOM (DS) respectively.

Third, the tailored force package determines initial sustainment responsibilities. The TSC and MEDCOM (DS) arrange the deployment sequence and RSOI of the ESC and medical brigades to support the corps as it deploys into the initial phase of operations.

5-16. When forces complete RSOI, attachment transfers to the gaining corps headquarters. As the ARFOR, the corps exercises OPCON of all Army units not otherwise subordinated by the JFC to another component, or controlled by the theater army through a theater command. The corps commander task-organizes the corps for the upcoming phase of operations by specifying command or support relationships between headquarters and subordinate units. (See table 5-1 on pages 5-6 and 5-7.) The corps commander organizes the corps according to a hierarchy of considerations.

DIVISIONS

5-17. The first priority for organizing the corps is the combat power required by the divisions. The divisions are the principal instrument with which the corps accomplishes its missions. Through the military decisionmaking process, the corps commander determines the number and types of BCTs necessary for the divisions to accomplish their respective missions. Unless there is an overriding operational requirement for the corps to retain command of a BCT, the division headquarters should control all the BCTs. The BCTs should retain their organic units. In some situations, the corps commander may detach one of the subordinate battalions of a BCT, but the corps should only do so based upon an important operational requirement, such as the corps reserve. The preponderance of BCTs goes to that division conducting the decisive operation.

5-18. Based on the missions of the divisions and allocation of BCTs, the corps commander determines the appropriate command and support relationships for brigades under the divisions. The corps may retain some brigades under corps command. This is both science and art. The optimum exercise of mission command at the corps is through the divisions. The corps' focus is normally at the operational level, and its planning horizons are different. In short, the corps commander provides the division commander with the combat power needed to fight battles and conduct tactical operations envisioned for that phase of operations, while the corps sets the conditions for the next phase through interdependent joint capabilities. The divisions require a mix of warfighting functions in addition to those organic to the BCTs that it can apply to the immediate operation. Ideally, the division controls a full set of multifunctional brigades (fires, maneuver enhancement, battlefield surveillance, and combat aviation) and receives medical and logistics support as required from the nearest theater sustainment brigades. However, the forces available are rarely enough to satisfy all the operational requirements, so the corps may retain control of selected brigades in order to influence current operations and manage scarcity.

BRIGADES UNDER CORPS CONTROL

5-19. The corps commander retains control of those brigades or smaller units with which it can directly affect the outcome of division operations in time and space. This is a function of supporting range and

supporting distance. (ADRP 3-0 discusses supporting range and supporting distance.) These factors become critical given the scope and scale of corps operations. For example, the corps may retain OPCON of a field artillery brigade and its multiple launch rocket system or High Mobility Artillery Rocket System battalions to shape the current battle across two or more division areas of operations. However, if the cannon battalions of the field artillery brigade are out of supporting range of all but one division, it makes little sense to retain them in general support. Therefore, the corps orders the field artillery brigade to reinforce the division conducting the decisive operation with the cannon battalions and uses missiles and joint fires to shape the corps operation. In another example, the Army force package may only include one tailored BFSB. The corps retains the BFSB under its control. The corps then task-organizes the capabilities of the BFSB, such as human intelligence and counterintelligence, into packages for attachment to the divisions.

5-20. Whether the corps retains control over selected brigades also depends upon tasks that the corps must perform, and for which a division is unavailable, excessive, or unsuitable. For example, if the JFC orders the corps to secure and control a JSA, the corps may retain OPCON of a MEB and reinforce the MEB for that mission. The corps commander evaluates the overall capability of each brigade for the particular task. If the threat, size of the JSA, and number of forces located inside it are too great for the MEB's capabilities, the corps commander normally assigns the mission to a division, if available. If the divisions are committed elsewhere, the corps could organize a corps task force built around the corps tactical command post with OPCON of a MEB, a MP brigade, and possibly supported by an air and missile defense battalion. The corps normally commands theater-level brigades and commands—theater tactical signal brigade, civil affairs, MISO, military intelligence brigades—other than the medical and sustainment brigades. The corps transfers control of subordinate elements of the theater-level units to the divisions as required by METT-TC. For example, a sustainment brigade operating within the division's area of operations would be under the TACON of that division for protection and movement, although it would remain attached to the ESC and provide support on an area basis to many units.

5-21. The CBRN brigade is one of the U.S. Army's functional brigades. It is a stand-alone headquarters, and it commands between two and six CBRN battalions together with attached separate companies and detachments. The headquarters is 100 percent mobile. The CBRN brigade normally supports the corps when the latter is the joint land component and ARFOR, but the brigade may be OPCON to a multinational forces land component headquarters or the JTF. (If a division is the ARFOR, the CBRN brigade supports that division.) The CBRN brigade commander may also exercise mission command of WMD elimination capabilities subordinate to a CBRNE operational headquarters. Its functions include exercising mission command of CBRN operations, providing ADCON for attached CBRN battalions, providing intelligence support for CBRN operations, and controlling battlefield obscuration. (See ATP 3-11.36.)

THE CORPS RESERVE

5-22. The corps constitutes, controls, and reconstitutes a corps reserve. The corps reserve serves as a hedge against uncertainty and allows the corps commander to react to opportunity and difficulty. The reserve is a fundamental component of the corps concept of operations. The size and composition of the reserve depends upon METT-TC, as will the specific command relationship within the corps task organization. The reserve should be large enough to affect changing tactical conditions that are beyond the capability of the divisions, but not so large that it seriously impairs the combat power of the division to accomplish its mission in the first place. If a division cannot accomplish its mission without the corps reserve, the concept of operations is flawed. There is always a degree of risk associated with the corps reserve. It should be powerful enough that it can exploit opportunity, or it can counter an enemy action without compromising the entire corps operation.

5-23. The composition of the reserve depends upon both its inherent combat power and its mobility. The reserve should have sufficient combat power to change the tactical outcome of a division's operation assuming a range of possible situations. It should be mobile enough that it is in supporting distance of corps tactical operations. The corps commander considers capability and location when positioning or designating the reserve. The corps commander has two options for control of the reserve. The corps can control the reserve, or the corps can restrict the employment of a specified force under divisional command until the corps commander orders its commitment.

5-24. The corps commander alone has the authority to commit the reserve. Once committed, the corps commander issues orders to reconstitute the corps reserve from available units within the corps.

Table 5-1. Command and support relationships for the corps

Relationship	*Use*	*Task Organization*	*Movement and Employment*	*Administrative Control (ADCON)*
Attached	The attachment should last for the duration of the campaign. A unit is often attached when the subordinate unit augments a higher headquarters.	The corps has the authority to task-organize as required, using any command or support relationship.	The corps can position the unit anywhere in the AO or delegate the unit to a subordinate commander through task organization.	Unless modified by the DA or the ASCC, ADCON transfers to the gaining HQ. The corps assumes ADCON of the unit, including logistics, medical, and administration.
Operational control (OPCON)	OPCON is a temporary change of organization that allows the gaining commander maximum flexibility to employ the subordinate unit.	The corps can place the entire unit or parts under OPCON, TACON, or in support of another unit. The corps may not attach the unit to another unit.	The corps can position the unit anywhere in the AO or delegate the unit to a subordinate commander through task organization.	ADCON remains with the parent unit headquarters. Additional logistics and medical support provided on an area basis.
Tactical control (TACON)	TACON is a temporary command relationship used among Army headquarters, other Services, and multinational forces. The JFC may specify TACON over specific capabilities (such as ADA fires) while leaving the Army task organization unchanged.	The corps may not change the organization of the unit under TACON. However, the gaining commander may place the entire unit under TACON or in support of another unit.	The corps may position the unit anywhere in the AO or delegate a positioning authority to a subordinate commander by task organization.	ADCON remains with the parent unit headquarters. Additional logistics and medical support provided on an area basis.
Direct support (DS)	Direct support allows the corps commander to set priorities and position the DS unit. It is similar to TACON but allows a larger unit to support a smaller formation. It allows the DS commander maximum flexibility while conforming to the corps' priorities.	The corps commander may put the DS unit in any support relationship to another unit. This includes support relationships between subunits. Note that the parent unit commander may adjust the task organization of the DS unit as needed.	The corps may position the unit within its AO or delegate positioning authority to a subordinate commander through a change in task organization. The supporting commander recommends the locations from which the DS unit can best support the mission.	Parent unit retains ADCON. Additional logistics and medical support provided on an area basis.

ADA	air defense artillery	ASCC	Army Service component command	HQ	headquarters
AO	area of operations	DA	Department of the Army	JFC	joint force commander

Table 5-1. Command and support relationships for the corps (continued)

Relationship	*Use*	*Task Organization*	*Movement and Employment*	*Administrative Control (ADCON)*
Reinforcing (R)	This relationship is between supporting units with similar capabilities such as artillery units, but not between different warfighting functions. The DS unit commander sets priorities for the reinforcing unit, and recommends positions for it to maneuver commander.	The parent unit task-organizes the reinforcing unit. The supported unit (providing DS) may not specify further support alignments.	The corps HQ coordinates with the maneuver HQ owning the AO. The division or brigade allocates terrain to the reinforcing unit based on recommendations from the DS unit.	Parent unit retains ADCON. Additional logistics and medical support provided on an area basis.
General support (GS)	GS units provide support to the corps as a whole. Units providing GS normally provide the support on an area basis. The JFC specifies priorities of support.	The parent unit task-organizes the GS unit.	Movement and positioning are controlled by the maneuver commander owning that AO.	Parent unit retains ADCON. Additional logistics and medical support provided on an area basis.
General support reinforcing (GSR)	GSR prioritizes additional capabilities between supporting units from the same headquarters. The headquarters assigns one or more units to support to the entire force. If a unit in DS or R requests reinforcement, the GSR unit gives priority to that support unit ahead of other requests unless disapproved by the higher HQ.	The parent unit task-organizes the GSR unit primarily to provide support to the force as a whole. Supported units may not specify further support relationships.	Movement and positioning are controlled by the maneuver commander owning that AO. The higher HQ of the supporting unit coordinates for movement and terrain with the HQ owning that AO.	Parent unit retains ADCON. Additional logistics and medical support provided on an area basis.

AO area of operations
DA Department of the Army
HQ headquarters
JFC joint force commander

OTHER SERVICE AND MULTINATIONAL UNITS

5-25. As a land component responsible for the use of landpower in a campaign, the corps often has control of other Service forces and multinational forces. Unless the JFC specifies otherwise, the corps exercises TACON over such forces made available. The corps absorbs these units within its task organization effectively when it adheres to certain considerations.

5-26. As the joint force land component, the corps normally is delegated TACON of other Service forces. The JFLCC and staff should understand the capabilities and limitations of other Service forces. A MAGTF placed TACON to an Army corps normally includes Marine Corps tactical air assets. The MAGTF commander retains OPCON of organic air assets. Consequently, commanders should address specifically the issue of employment of Marine tactical aviation (that is, independent functional component air operations) during planning. Therefore, the activities of the BCD and Marine liaison element to the JAOC should be coordinated. The joint force land component also must be prepared to receive and coordinate

with Navy expeditionary forces (for example, riverine units and Navy construction engineers). The land component commander also coordinates with USTRANSCOM and the naval commander concerning a maritime pre-positioning force or the equipment of Army pre-positioned stocks. (See JP 3-31.)

5-27. Different land forces units have unique capabilities. TACON maintains the tactical integrity of the other Service forces. The corps places the other Service forces under the TACON of a higher echelon with the capability of controlling and employing that force to its full capabilities. In the case of Marine expeditionary brigades and Marine expeditionary units (MEUs), with their organic aviation assets, the controlling echelon is normally two echelons above the subordinate Marine expeditionary force. The corps retains TACON of the entire Marine expeditionary brigade and an Army division may have TACON of a MEU. The corps exchanges liaison with the subordinate other-Service units under its direct command. In the case of a Marine expeditionary brigade, the corps incorporates Marine Corps staff into a joint force land component headquarters.

5-28. Multinational forces have both unique abilities and unique requirements. The corps commander should retain national integrity at the highest level feasible. This is not necessarily the same as the most efficient distribution of multinational troops. The art of command and science of control for mission command applies even more for multinational forces. Every multinational force has strengths and weaknesses. In some cases, the multinational units integrate with U.S. forces at a small-unit level to improve training and ensure the survival of the multinational unit. In other cases, the multinational unit remains directly under the land component's command because of political considerations. Multinational forces also come with constraints unique to the particular arrangement of the coalition or alliance. Commanders and staff remain aware that multinational forces may not have the ability to communicate digitally, or if they do, their systems might not be compatible. This often creates an additional layer of complexity to planning and execution. To maintain situational understanding of the multinational issues and perspectives, the corps should have a liaison detachment from each national force embedded in the combined land component headquarters. The corps also provides additional communications and liaison support to each multinational force, either directly or by tasking a subordinate Army unit. In many cases, this requires reinforcement by the theater army to the supporting communications units. For example, the corps may receive and deploy tasking a digital liaison detachment a subordinate theater army unit. (See FM 3-16.)

OPERATIONAL CONTROL AND SUPPORT

5-29. The corps specifies OPCON primarily when changing the subordination of one Army unit to another in the task organization. The supporting theater sustainment and medical units adjust their support in accordance with the priority of support and the position of each to the supported Army unit. In the case of small, specialized units such as civil affairs and MISO, the corps attaches them to the gaining division or brigade headquarters unless the subordination will be brief. This changes the ADCON relationship between the supporting unit and gaining unit but simplifies administration and logistics when the subordination is lengthy.

5-30. The corps specifies a support relationship between units in the corps when a superior and subordinate relationship is inappropriate. This is the case when the echelon of the supporting and supported units is the same or the supporting unit is a higher echelon formation. A support relationship also recognizes that the type of support provided is specialized, and the supported commander only specifies priorities and minimum movement and terrain control measures.

5-31. The corps current operations integrating cell maintains the complete corps task organization and distributes it across the corps staff. Any change to the corps task organization is made through an operation order or a fragmentary order sent by the current operations integrating cell.

5-32. Several theater-level commands normally support corps operations: the TSC (through the ESC); the MEDCOM (DS) through the deployed medical brigade (support); the signal command (theater); the military information operations group; and the AAMDC. The TSC remains attached to the theater army, and the ESC normally provides direct support to the corps. The MEDCOM (DS) is attached to the theater army, and its subordinate medical brigade(s) (support) deploy to the joint operations area in direct support of the corps. The signal command (theater) extends the network by deploying tactical signal brigades to

link headquarters across the AOR. The AAMDC normally provides direct support to the AADC and may provide air defense units in direct support of the corps. As a supported command, the corps develops priorities for sustainment, health service support, and air defense. To provide the support, the subordinate units of the theater-level commands require terrain within the corps area of operations and protection from ground threats. The theater army commander ensures that the TSC, ESC, and AAMDC collaborate with the corps in developing all plans and orders. Each command should provide a liaison element to the corps headquarters along with planners as requested by the corps. As the campaign expands in scale, other theater commands provide additional support. (Refer to chapter 3.)

THE CORPS AREA OF OPERATIONS

5-33. The JFC assigns the corps its area of operations when the corps is a land component. Within the land area of operations, the corps commander is the supported commander and the other components provide support in accordance with the joint concept of operations. The corps commander collaborates with the JFC to determine how much of the land portion of the joint operations area that the land component can effectively control. The corps commander considers forces available, the area of influence, and joint capabilities when recommending the land area of operations. Ideally, the land area of operations equals the area of influence of the land forces available, balanced against the capabilities of the total joint force. The corps commander estimates the corps' *area of influence*—a geographical area wherein a commander is directly capable of influencing operations by maneuver or fire support systems normally under the commander's command or control (JP 3-0). The actual area of operations may be somewhat smaller than the area of influence. This difference requires a balance between forces available and the size of the area of operations. Too large an area with regard to the available forces and the corps may not accomplish its mission. If the area of operations is too small, the corps may fail to use subordinate forces to their full capacities.

Responsibilities within an assigned area of operations

- Terrain management.
- Information collection.
- Intelligence collection, integration, and synchronization.
- Civil affairs operations.
- Movement control (ground and air).
- Clearance of fires.
- Security.
- Personnel recovery.
- Airspace control.
- Environmental considerations.

5-34. The corps commander assigns subordinate areas of operations based upon METT-TC. The area of operations is a fundamental control measure. It empowers subordinate initiative and provides a limit for decentralized execution. The first priority for allocation of terrain is to the divisions. The division's area of operations should allow the division commander full use of the division's BCTs and supporting brigades. When assigned an area of operations, the subordinate division commander takes responsibility for managing terrain, collecting information, conducting security operations, controlling airspace and ground movement, clearing fires, and conducting operations in that area of operations. (See ADRP 3-0 for a discussion of area of operations.) The corps also assigns areas of operations to Marine Corps combat units, multinational divisions and brigades controlled by the corps, and MEBs attached to the corps.

5-35. If the corps has a multinational unit under its control, the corps commander carefully reviews the area of operations assigned to that headquarters. The corps commander reviews tasks inherent with control of the area of operations and discusses corps contingencies developed for that area with each multinational commander. Areas of operations and boundaries between forces of different nations are always potential weak points. This is not a discredit to the multinational force; it is recognition of the inherent friction in multinational operations. The friction results from different doctrines, networks, languages, and force structures. The corps commander stresses to adjacent multinational commanders and U.S. commanders the importance of effective liaison between both and directs the corps staff to support liaison requirements.

5-36. The commanding general may divide the corps area of operations in one of three ways: contiguous area of operations, where subordinate units share a common boundary; noncontiguous area of operations, where they do not; or a combination of the two, containing some areas reserved for corps control. (See figure 5-1 on page 5-10.) At the corps level, a combination is typical with the corps assigning the majority of the area of operations to its divisions in contiguous areas, and retaining control of areas beyond the influence of the divisions. Figure 5-1 shows this on the left side. An area assigned to corps control is that

area between noncontiguous areas of operations or beyond contiguous areas of operations. This area becomes the corps deep area (see the right side of figure 5-1). The higher headquarters is responsible for controlling those areas of operations not assigned to its subordinate units. (See ADRP 3-0.) The type of area of operations affects the corps's requirement to resource the assigned mission. The unit controlling the ground has responsibility for terrain.

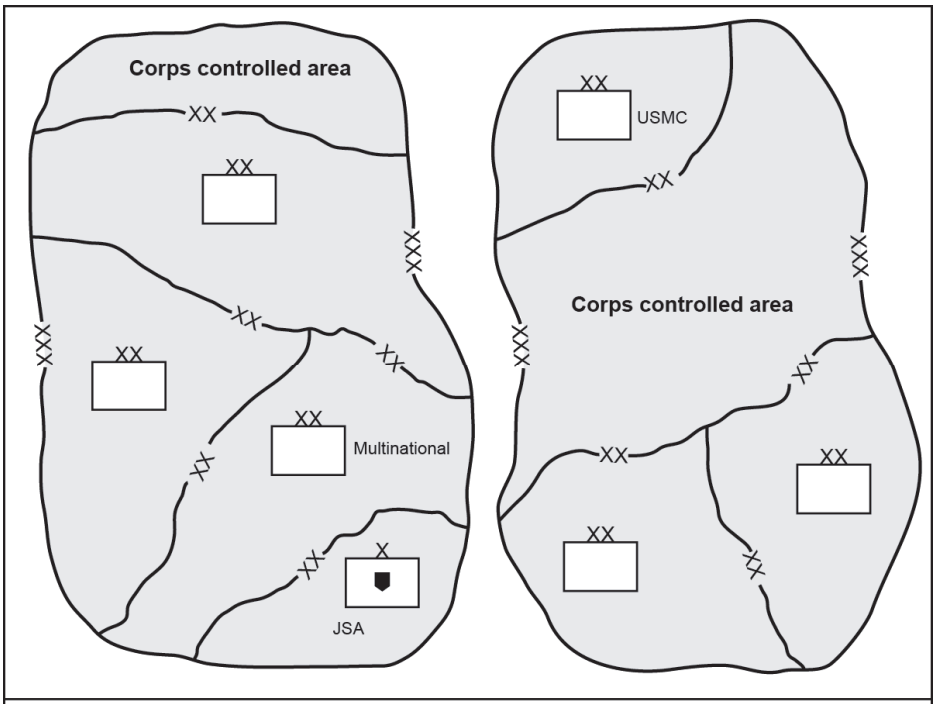

Figure 5-1. Possible configurations for the corps area of operations

5-37. Within the areas not assigned to a division, the corps should develop sufficient situational awareness to prevent the enemy from massing forces and capabilities that endanger elements of the corps. The corps assesses the risk and reacts accordingly. The corps staff develops a contingency plan to cover the corps areas with increased intelligence assets and sufficient forces to defeat a potential threat. The corps can control areas of operations that have low risk in many ways. For example, areas with no indication of enemy forces only receive periodic surveillance and reconnaissance. If the potential risk increases, the corps could assign some or all the area to a subordinate unit with orders to develop the situation, collect information, and disrupt any enemy forces detected in the area. At a minimum, the corps commander can assign be-prepared tasks to subordinate units adjacent to the corps areas for dealing with potential threats.

5-38. The commanding general has several options available to gain and maintain control of the corps area of operations not assigned to subordinate units. The commanding general coordinates with joint, host-nation, and multinational forces to take responsibility for all or portions of the area. Designated units may initially control corps areas by temporarily occupying portions of the area. For example, friendly forces may continuously transit from contiguous to noncontiguous areas or from one noncontiguous area to another. These forces can provide intelligence and coverage of the areas.

5-39. The corps may designate a support area adjacent to the divisions' areas of operations. The support area becomes that area in which the corps concentrates sustainment, available aviation, and support units for other Services. The corps delineates the support area based on its geographical advantages for sustaining the force and protecting these assets. Although the support area may be noncontiguous with the other major subordinate units, this is rare. An area between the divisions and their support that is not under division control always poses a weakness to the corps' freedom of action. If necessary, the corps commander positions sustainment units in bases located inside the divisional areas and assigns line-of-

communications security to the divisions. A similar situation may occur when the JFC establishes a JSA for theater support. The corps commander should designate an area of operations that encompasses the ground lines of communications between the corps and theater support area.

THE CORPS AND JOINT FORCES

5-40. The corps as a land component has the principal responsibility for arranging joint capabilities together with landpower. Joint capabilities are the primary means available to the corps commander for setting conditions and shaping the environment for division operations. The corps requests, plans for, employs, and allocates joint capabilities to subordinate forces.

AIR FORCE

5-41. The United States Air Force (USAF) is a crucial partner to the Army in any major operation or campaign. The USAF provides the corps headquarters with an air support operations group (ASOG). The ASOG's mission is to provide specially configured liaison packages to assist the corps commander with integrating the full range of air power appropriate to the mission of the corps. Thus, both the mission and makeup of the ASOG will change when the mission of the corps changes. The USAF provides the division headquarters an air support operations squadron (known to the Air Force as ASOS). The air support operations squadron provides the division with tactical air control parties (TACPs) and an air support operations center (ASOC) that functions at the division level. The TACP supports the subordinate units of the division and the ASOC supports the division headquarters.

5-42. Each corps has an assigned air liaison officer. When the corps becomes the operational-level land component headquarters (joint force land component or multinational forces land component) or the JTF headquarters, the USAF ASOG will form the nucleus of a joint air component coordination element (known as the JACCE) to the JFLCC or JTF headquarters. The joint air component coordination element is the direct representative of the commander, Air Force forces and JFACC. This element co-locates with the joint force land component to coordinate and integrate air power into land operations at the operational level of war. If the corps is the ARFOR (for RSOI), then the ASOG serves as the nucleus of the USAF coordination element. When established, the commander of the USAF coordination element acts as the commander, Air Force forces' primary representative to the ARFOR. This element advises the ARFOR commander and staff on the capabilities and limitations of airpower and assists the ARFOR commander with the request for forces and RSOI of Air Force forces directly supporting Army forces.

5-43. When the corps serves as a tactical headquarters, the corps does not receive the joint air component coordination element. Instead, the USAF commander directs the division air support operations squadrons to provide an ASOC capability to the corps headquarters. The ASOC is a modular element and the USAF adjusts the staffing and communications capability to the responsibility for the corps when it operates as a tactical or intermediate headquarters. The ASOC is the principal USAF command and control node for integrating air power into Army land operations. As a direct subordinate element of the JAOC, the ASOC is responsible for the direction and control of air component operations directly supporting the Army land operation. It processes and coordinates air missions requiring integration with other supporting ground forces. The ASOC usually co-locates with the senior Army tactical echelon (normally a division, but it may be a corps) and coordinates operations with the permanently aligned TACPs and the JAOC. The ASOC and TACP normally integrate with the current operations fires cell and airspace element to form a joint air ground integration center (JAGIC). The JAGIC integrates and coordinates fires and air operations over and within the commander's area of operations. As the air component portion of the JAGIC, the ASOC is responsible for the direction and control of air operations in the corps' assigned airspace within its area of operations requiring integration with other supporting arms and ground forces. If the ASOC uses a fire support coordination line (FSCL), the ASOC normally controls air component operations short of this FSCL and below the coordinating altitude. (For further information on Army assigned airspace, see FM 3-52.)

5-44. As previously discussed, the ASOC may also coordinate in other mission areas, to include air interdiction, joint information activities, air defense, information collection, joint suppression of enemy air defenses (known as J-SEAD), airlift, and joint personnel recovery. Air missions that fly within the corps

airspace but do not directly support the ground component normally are coordinated through the ASOC to de-conflict with ground force maneuver and fires as well as to receive target and threat updates.

Planning for Air Support

5-45. The supported ground commander is responsible for ensuring that the supporting air commander understands the assistance required. (See JP 1.) When the corps becomes the joint force land component command or a single Service headquarters controlling land operations (as an ARFOR), specific inputs to the supporting air component affect air support to ground forces. This includes but is not limited to the air apportionment recommendation, air operations directive, and air tasking order (ATO). The Army also provides critical input to the area air defense plan and supporting tactical operational data. The air operations directive has the most current and significant guidance for each air battle plan to drive the daily joint air tasking cycle. It delineates targeting priorities for the use of joint air assets. The ATO is the key document published and disseminated by the JFACC to delineate all air operations for 24-hour duration. The airspace control plan and airspace control order are airspace control authority functions that affect both ground and air operations. The land component commander (JFLCC or ARFOR commander) ensures that both support Army airspace requirements. The senior air and missile defense commander (normally the AAMDC commander) provides area air defense plan and tactical operational data input to the AADC.

5-46. The supported Army headquarters processes and either approves or denies preplanned and immediate air support requests through the Army air-ground system to identify external air support requirements to the air component. One type of air support request is a joint tactical air strike request (JTAR). JTARs go through fire support planning and process through the fires cell. Each echelon approves and prioritizes these requests before going to the BCD at the JAOC with the Army's battle rhythm complementing the joint air tasking cycle. Preplanned JTARs must go to the supporting air component in sufficient time to meet the planning stages of the joint air tasking cycle and to appear on the ATO. Normally the BCD sets the suspense for preplanned JTARs and ensures that the supported Army staff adjusts its planning accordingly. Immediate JTARs occur after publication of the ATO. The supported ASOC normally answers immediate requests (when given decentralized execution authority) with best available air assets that are already on the ATO.

Air Mobility Operations

5-47. The Army is the largest user of airlift. The airlift system can respond to Service and joint commander's needs with rapid response globally and within the theater. The air mobility system can provide a direct delivery preference from outside the AOR directly into operating locations within the AOR to reduce cargo downtime. This mobility system provides air movement, air-refueling support to airlift aircraft, aeromedical evacuation, and air-drop options for the Army and joint forces. The corps, as the joint force land component or ARFOR, prioritizes transportation and movement requirements based on operational necessities. Intratheater airlift provides a capability to respond to high priority combat and logistics movement requirements. The corps validates and prioritizes intratheater airlift requests. One request includes airborne operations processed through the G-3 to the J-3. Another is the Army's air mobility requests normally processed through the G-4 to the Deployment and Distribution Operations Center to coordinate and prioritize theater airlift requests for the joint force.

5-48. The JAOC air mobility division monitors airlift operations and scheduling. The BCD airlift section co-locates with the air mobility division and monitors joint airlift operations. The BCD airlift section is the point of contact within the JAOC for coordinating and monitoring Army airlift requests, changes, and cancellations. The USAF provides air mobility liaison officers to Army corps, division, TSCs, separate regiments, selected brigade echelons, and other jointly validated headquarters to provide air mobility liaison, special staff assistance, and controlled airdrops for the ground commander.

Direct Support Airlift

5-49. If the common-user airlift system proves inadequate for the needs of the joint force land component (or ARFOR), then the JFC can task the JFACC to provide direct support airlift to JFLCC. In cases where the JFC operates by Service component, the JFACC provides the ARFOR with direct support airlift. The JFC apportions a certain amount of the total number of airlift sorties required to support theater movement

requirements for priority mission critical or time sensitive airlift. The joint force land component (or ARFOR) determines the timing and routing priorities of these missions and relays this information to the JFACC combined air operations center for planning and execution. Aircraft accomplishing this mission are under TACON of the JFACC. The missions normally operate via a support agreement with the supported component, in this case the joint force land component.

Fire Support Coordination Line

5-50. The corps plan should make maximum use of the operational reach of U.S. air power. To maximize the ability of the JFACC to strike and interdict enemy forces, the corps commander uses a carefully selected FSCL. The FSCL is a permissive fire control measure for expeditious engagement of targets of opportunity beyond the coordinating measure. An FSCL does not divide an area of operations. It delimits the areas within which the land component is conducting ground operations and areas in the corps area of operations where the JFACC can employ maximum combat power in support of the corps. Short of an FSCL, the corps commander controls all air-to-ground and surface-to-surface engagement operations in the area of operations. For maximum flexibility from the supporting air component, the corps establishes the FSCL beyond the effective cannon range of the committed BCTs and then adjusts the FSCL as maneuver dictates displacement of artillery and other corps supporting assets.

5-51. Use of an FSCL is not mandatory. Forces engaging targets beyond an FSCL must inform all affected commanders in sufficient time to allow necessary reaction to avoid fratricide, both in the air and on the land. The FSCL applies to all fires of air, land, and sea-based weapons systems using munitions against surface targets. In exceptional circumstances, the inability to complete this coordination does not preclude the engagement of targets beyond the FSCL. However, failure to do so increases the risk of casualties from friendly fire. (See JP 3-09.)

Airspace Control

5-52. Army airspace users are ground forces operating in an inherently joint environment. Army commanders are responsible for integrating Army airspace users, regardless of who controls the airspace, within the larger joint airspace control framework. The Army depends on its joint partners for capabilities that do not reside within the Army, and it operates more effectively with their support. The Army air-ground system interfaces with the theater air-ground system to integrate air support with ground operations. The Army air-ground system allows the coordinating and integrating air operations with the ground commander's concept of operations. It allows for initiating and processing air support requests, collection requirements, airspace coordination, joint fires, air and missile defense, and liaison. Army commanders use the Army air-ground system to coordinate and integrate airspace use and users over the ground commanders' assigned area of operations.

5-53. The corps headquarters oversees airspace control policy and standardization of tactics, techniques, and procedures throughout the corps area of operations. It executes airspace responsibilities when it serves as an intermediate tactical headquarters, an operational-level Army force, a joint force land component command, or a JTF headquarters. Airspace element personnel in the main and tactical command posts integrate airspace operations with the functional and integrating cells. The airspace element coordinates with the TACP and with either the joint air component coordination element or ASOC co-located with the headquarters. In most situations, the corps headquarters is the senior Army airspace element. As such, the corps headquarters contributes to the BCD's airspace section to ensure the joint airspace policies and documents incorporate the Army airspace priorities and requirements.

5-54. The corps has airspace responsibilities to coordinate Army and supporting airspace user requirements within its area of operations, including portions of the area of operations further assigned to subordinate units. The corps may have additional airspace control responsibilities to provide joint airspace control for airspace as directed by its higher headquarters or the airspace control authority and as defined in the airspace control plan. This corps-assigned airspace is normally that airspace assigned by the airspace control authority that is within the boundaries of the corps' area of operations up to the coordinating altitude. The assigned airspace may not be over the entire corps' area of operations but could be a smaller area within the corps' area of operations. The airspace assigned depends on the corps' ability to control it effectively. (See FM 3-52 and JP 3-52.)

5-55. The corps' specific responsibilities for managing airspace depend on responsibilities delegated to it by the airspace control authority and its role (operational or tactical headquarters) within the joint force. As an operational headquarters (joint force land component command, multinational forces land component, or ARFOR), the corps headquarters normally decentralizes airspace control to subordinate divisions within their respective areas of operations (division-controlled airspace). It authorizes direct liaison between them and other theater air-ground system airspace control nodes provided by other Services. The corps retains responsibility for integrating airspace users. The corps integrates all airspace requirements for corps-controlled BCTs and other brigades not assigned an area of operations. The corps airspace element may retain responsibility for airspace control over any portions of the area of operations not assigned to subordinate units (corps-controlled airspace). Responsibility depends upon the size of the corps controlled portions of the area of operations, the capabilities of the corps airspace element, and the details of joint air operations.

5-56. When the corps headquarters functions as a tactical headquarters under a joint or multinational land component, the corps normally controls airspace over the corps area of operations directly. This is because the corps area of operations is usually much smaller. In this situation, the corps headquarters would have an ASOC or equivalent instead of the joint air component coordination element it would receive as an operational headquarters. (For a more complete discussion of airspace control, see FM 3-52.)

SPECIAL OPERATIONS FORCES

5-57. Within the corps' area of operations, conventional forces and SOF often operate near each other to accomplish the JFC's mission. Historically, commanders have employed SOF in the advance phases of operations. During extended or large-scale operations involving both conventional forces and SOF, control and de-confliction measures become vital to the integration and synchronization of conventional and special operations missions. The corps commander considers both conventional forces and SOF capabilities and limitations, particularly in tasks associated with mission command and sustainment warfighting functions. The exchange of liaison elements between the staffs of appropriate conventional forces and SOF further enhances integration of all forces concerned.

5-58. During mission planning, the corps staff and SOF planners include options regarding how to integrate conventional forces and SOF ground elements. Successful integration and interoperability of conventional forces and SOF depend on understanding each other's missions, systems, capabilities, and limitations. Exchange and use of liaison and control elements are critical when conventional forces and SOF conduct operations in the same operational area against the same threat. Integration of SOF with conventional forces is always a critical concern for SOF commanders, and areas of interest typically include, but are not limited to—

- Target de-confliction.
- Communications systems.
- Political concerns.
- Civil populace.
- Possible linkup of ARSOF with conventional forces.
- Mission command.
- Information operations staff section.
- Electromagnetic spectrum management.
- Information collection.
- Airspace control.
- Fire support coordination, to include fire control measures.
- Coordination of logistics and area of operations support.
- Personnel recovery.

5-59. ARSOF provide capabilities that expand the options available to the corps commander; however, ARSOF are not the ideal solution to all problems requiring a military response. The best means of employing ARSOF is usually with conventional forces in which each force operates as a component of the joint force. This expands options for dealing with hybrid threats, for example, because ARSOF conduct

unconventional warfare, foreign internal defense, and counterterrorism. The mutually beneficial actions of SOF and conventional forces contribute to shaping and military engagement. The corps frequently supports joint security cooperation activities as part of the campaign. Army conventional forces and SOF units train partner units to increase multinational units' proficiency. It is important to sustain a long-term relationship between conventional forces and SOF because they benefit each other. ARSOF relies on operating with the support of conventional forces. (See JP 3-05 and ADRP 3-05 for more information on special operations.)

5-60. Conventional force operations and special operations require coordination and liaison among all components of the joint force and the joint force land component command to ensure that component command and control, intelligence, movements and maneuver, fire support, and sustainment are fully integrated and interoperable. The focal point for synchronization of SOF activities with conventional joint land operations is the special operations command and control element (SOCCE) which co-locates with the supported or supporting command element of the joint force land component. (See JP 3-31.)

5-61. The SOCCE is predominantly an ARSOF element but Navy and Marine Corps SOF may form SOCCEs when these forces operate with the joint force land component. The SOCCE performs command and control and liaison according to mission requirements and as directed by the establishing SOF commander (the theater special operations command, joint force special operations component commander, or commander, joint special operations task force). The SOCCE can receive operational intelligence and target acquisition reports directly from deployed SOF elements and provide the reports directly to the associated headquarters of the joint force land component. The SOCCE remains under OPCON of the establishing SOF commander, but may be in direct support of the joint force land component. (See JP 3-31.)

JOINT INTELLIGENCE AND INFORMATION COLLECTION

5-62. Planning, execution, and assessment of information collection activities require integration across all echelons. The corps integrates corps capabilities with all other joint activities, systems, efforts, and capabilities to provide the information the commander requires to make timely decisions. Subordinate Army commanders submit their requests for information through echelon channels; if the corps as the land component cannot satisfy the requests, the information requests pass to the JTF for research and response. Corps and division commanders can submit a request for collection or request for joint support to the joint intelligence operations center, which apportions its assets or resources from higher echelons against the requests in order of priority, as defined by the JTF commander. Collection requirements that the JTF cannot satisfy using assets controlled or apportioned by the JTF go into the national intelligence system for collection.

5-63. An understanding of joint intelligence, surveillance, and reconnaissance (ISR) is required to understand the relationship of Army intelligence operations and information collection to joint ISR. (See ADRP 2-0.) In joint collection management operations, the synchronization manager, in coordination with the operations directorate, forwards collection requirements to the Service component commander exercising TACON over joint ISR assets. A mission tasking order goes to the unit selected as responsible for the collection operation. The selected unit, sometimes called the mission manager, makes the final choice of specific platforms, equipment, and personnel required for the collection operation, based on operational considerations, such as maintenance, schedules, training, and experience.

5-64. Joint air planning products produced by the JAOC include the ATO, airspace control order, and special instructions (known as SPINS). An ATO is used to task and disseminate across components, subordinate units, and headquarters all projected aircraft sorties and aerial capabilities for the affected joint operations area. The airspace control order is an order implementing the airspace control plan that provides the details of the approved requests for airspace coordinating measures. It is published either as part of the ATO or as a separate document. (JP 3-52 provides more details on airspace control orders.) Special instructions are instructions issued to aviators that describe detailed procedures for loss of communication, escape and evasion, and search and rescue operations. (See JP 3-30.)

5-65. At the JTF or joint force land component, aerial collection missions are developed via the joint collection working group and the Joint Collection Management Board. The joint collection working group is the ISR planning forum for the management of collection requirements and the coordination of collection

operations much like the Army's operations and intelligence work group. The joint collection working group—

- Receives requirements from subordinate echelons.
- Validates these requirements against priority intelligence requirements.
- Prioritizes requirements against the commander's stated ISR collection priorities.
- Prioritizes requirements against organic and attached ISR assets.
- Coordinates allocation of aerial ISR collection assets.
- Approves collection target decks for inclusion in the reconnaissance, surveillance, and target acquisition annex in the daily ATO.

5-66. The Joint Collection Management Board reviews the aggregate daily collection requirements, deconflicts them where necessary, and prioritizes said requirements. It assigns priorities for the allocation of platforms against requirements and sensors. It articulates collection management guidance to the components while ensuring coordination and deconfliction of requirements with the intelligence community. The components act on the guidance and direction provided from the Joint Collection Management Board. They ensure proper resourcing and allocation of targets to assets for which they are assigned collection operations management authority. This process streamlines tasking and effectively and efficiently uses limited collection assets.

SPACE SUPPORT

5-67. The Army relies on space-based capabilities and systems, such as navigation and timing, global positioning, satellite communications, weather satellites, and information collection platforms. These systems are essential tools used by the corps to plan, communicate, navigate, and maneuver forces, maintain situational awareness, engage the enemy, provide missile warning, and protect and sustain forces. Space-enabled capabilities are ubiquitous and every element of the joint force uses them. To meet corps requirements, planning and coordination of space support requires national, Service, joint, and theater-based capabilities. The corps staff has an Army space support element. This element coordinates with other space control elements at the JAOC, the theater army, and national resources. The corps becomes the principal integrator of space capabilities in support of the land component. The space support element coordinates directly with the joint space coordinating authority—normally the JFACC—for support by space-based systems to meet corps requirements.

5-68. The loss of space-based communications due to enemy activity remains a major concern for Army forces conducting deployed operations. Whether enemy action against U.S. satellites causes an interruption of the communications through persistent jamming or spoofing, the resulting blackout requires Army forces to adapt and adjust until U.S. forces restore the capability. Short-term loss of satellite communications may be mitigated through alternative communications methods and courier networks.

AIR AND MISSILE DEFENSE

5-69. The threat posed by enemy ballistic missiles, cruise missiles, and unmanned aircraft systems is increasing. During Operation Iraqi Freedom I, for example, an Iraqi missile (probably a FROG 7) scored a direct hit on the command post of the Second Brigade of the 3d Infantry division. Earlier in the campaign, the Iraqis employed antiship cruise missiles against land targets. Defending friendly assets against future threats becomes very important. Ballistic and cruise missiles can engage and destroy targets from well beyond the corps area of operations and threaten theater-level bases. Protecting the force from these weapons demands an integrated, AOR-wide air and missile defense umbrella. The AAMDC provides this capability. The AAMDC is attached to the theater army and commands all Army air defense units within the AOR. The command and support relationships among the subordinate units of the AAMDC, joint forces, and the corps vary extensively according to the threat.

5-70. The AAMDC normally provides direct support to the AADC. Frequently the JFACC is also the AADC. The AADC is the commander with the preponderance of air defense assets in a joint operations area. The AADC integrates air and missile defense capabilities in the joint operations area. Specifically, the AADC establishes central control of theater air and missile defense. This requires integration of joint

control systems and Army mission command systems with sensor, strike, and shooter assets. Normally, the AAMDC commander is the deputy AADC.

5-71. The AAMDC commands one or more air defense brigades. The composition of the air defense brigade depends upon the threat, but normally includes Terminal High Altitude Area Defense (known as THAAD), Patriot, Avenger, and counter rocket, artillery, and mortar (C-RAM) units. The brigade commander task-organizes batteries under air defense battalions. In general, Terminal High Altitude Area Defense and Patriot units operate in direct support of the AADC. Task-organized air defense battalions consisting of Avenger and C-RAM batteries provide direct support to the corps.

5-72. Figure 5-2 provides an example of air and missile defense for a major operation. In this example, the AAMDC commands two air defense brigades. One brigade defends theater assets outside the joint operations area. A second brigade provides direct support to the JFACC or AADC with two Patriot battalions. The brigade commander places two task-organized battalions consisting of Avenger and C-RAM batteries in direct support of the corps.

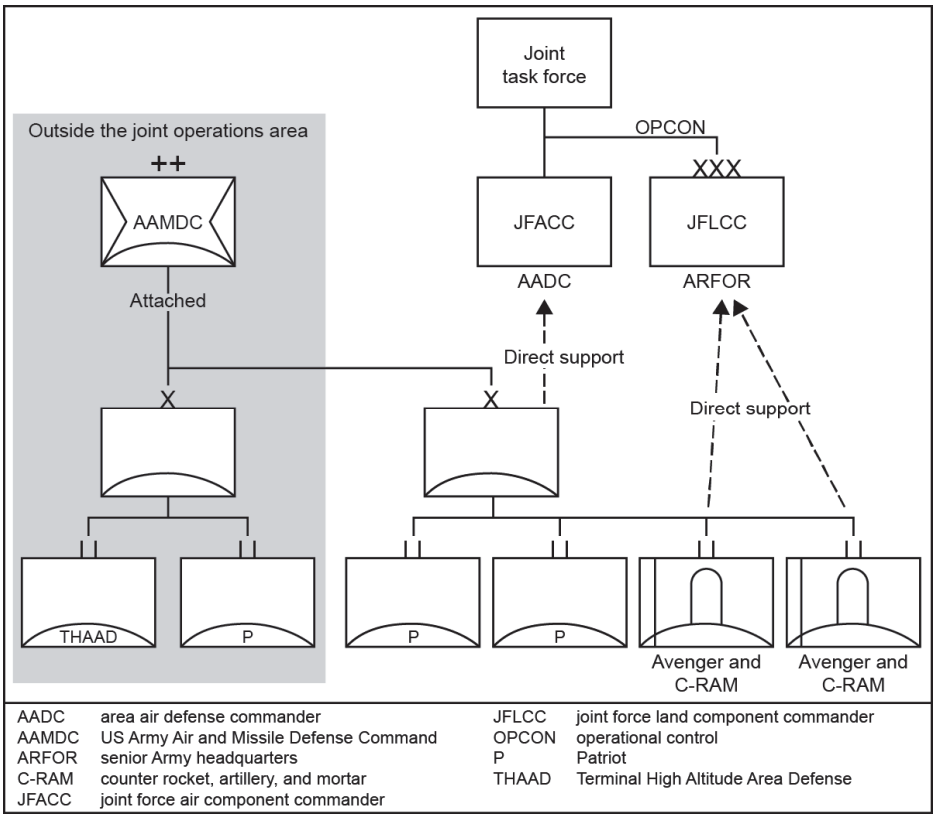

Figure 5-2. Air and missile defense

5-73. The corps distributes air defense capabilities provided by the AAMDC between the divisions and the support area by establishing priorities for air and missile defense. Depending upon the tactical situation, further decentralization of air defense batteries to individual brigades may occur. The AAMDC may detach Avenger and C-RAM units to the corps, division, or a BCT. However, TACON of engagements remains with the AADC and regional control centers to allow friendly air power maximum latitude to achieve air superiority and support ground forces.

NUCLEAR OPERATIONS

5-74. The United States Army Nuclear and Combating Weapons of Mass Destruction Agency (known as USANCA) maintains nuclear employment augmentation teams (NEATs) to deploy and augment the planning staff of at corps or echelons above corps for adaptive nuclear planning at the commander's

request. The NEAT provides the resident expertise in nuclear planning and execution to offset a lack of knowledge and doctrine at the geographic combatant command level to ensure an Army and joint interface in theater nuclear operations.

5-75. The NEAT provides nuclear targeting experience and assistance in analyzing the impact of offensive nuclear weapons on the friendly scheme of maneuver. The NEAT provides the supported commander with independent analysis theater nuclear plans to ensure that these plans are synchronized with ground operations. The NEAT is available at all times to assist Army planning staffs in nuclear operations, exercise participation, and OPLAN development.

CYBER ELECTROMAGNETIC ACTIVITIES

5-76. *Cyber electromagnetic activities* are activities leveraged to seize, retain, and exploit an advantage over adversaries and enemies in both cyberspace and the electromagnetic spectrum, while simultaneously denying and degrading adversary and enemy use of the same and protecting the mission command system (ADRP 3-0). CEMA consist of cyberspace operations, electronic warfare, and spectrum management operations. CEMA integrate and synchronize the functions and capabilities of cyberspace operations, electronic warfare, and spectrum management operations to produce complementary and reinforcing effects. While these activities differ in their employment and tactics, their functions and capabilities are integrated and synchronized to maximize their effects. CEMA provide commanders with the ability to gain and maintain an advantage in cyberspace and the electromagnetic spectrum.

5-77. The CEMA element and working group within the corps, working with similar elements at division and theater, becomes the primary integrating headquarters staff for CEMA. The corps receives augmentation for the 1st Information Operations Command to increase its ability to coordinate and integrate CEMA. The corps CEMA personnel may initiate or otherwise process requests for support through the targeting process. Requests for cyberspace effects are submitted to the joint headquarters for approval and resourcing. The CEMA element supports corps efforts to build, operate, and defend the network; attack and exploit enemy and adversary systems; gain situational understanding; and protect individuals and platforms. The CEMA elements at each echelon identify the enemy's high-value networks and identify means to disrupt enemy electronics and communications activities at critical times. These attacks can disrupt enemy target acquisition, intelligence gathering, and command and control systems. The object is either to destroy the enemy's command and control system or create ambiguity and interrupt the enemy's ability to identify, decide, and transmit plans and orders. Military deception and jamming—combined with operations security—cause lethal and nonlethal effects on the enemy while protecting division and corps information systems from similar enemy activities.

5-78. CEMA require joint capabilities and planning and often employ strategic resources. Corps, division, and theater headquarters may receive augmentation from Army and joint organizations. The role of the corps determines whether it receives a cyber support element or an expeditionary cyber support element. If a corps deploys as a JTF, then USCYBERCOM would provide it with the expeditionary cyber support element. If the corps becomes the joint force land component command, then U.S. Army Cyber Command would provide it with the cyber support element. The corps, working with theater CEMA and subordinate division elements, normally develops requests for CEMA effects through the targeting or other applicable processes. Operations in cyberspace or against a physical cyber asset occur under national or combatant commander authority and are subject to applicable rules of engagement. Corps commanders may be restricted from conducting offensive cyber operations but should prepare for lethal actions against known enemy cyber assets within their area of operations. Requests for offensive cyber and electronic warfare capabilities go to the joint headquarters for approval and resourcing. Because of the classification involved, some or all requests for this support go through special information channels. (For more information on the cyber support element and expeditionary cyber support element, see ATP 3-09.32, appendixes K and L.)

UNITED STATES MARINE CORPS

5-79. Soldiers and Marines have fought together for over 150 years. As a joint force land component, the corps may have TACON or OPCON over a Marine Corps force. Normally, the largest Marine Corps force that may be under the corps control is a Marine expeditionary brigade organized as a MAGTF. The Marine expeditionary brigade normally includes a Marine Corps rifle regiment with attached artillery, armor, and

other combat support. Marine Corps combat forces are organized and equipped to fight as air-ground combined arms task forces with their own fixed-wing and rotary-wing assets. The Marine expeditionary brigade includes a Marine air squadron with both types of assets. A Marine Corps brigadier general commands the MAGTF.

5-80. The Marine expeditionary brigade is a powerful force with different capabilities and limitations from an Army BCT. It is well suited for independent operations under corps control in a large area of operations. The Marine expeditionary brigade has tanks, more infantry, and more armored vehicles than an infantry BCT, as well as its own close air and attack aviation. It has less tactical mobility than the Stryker BCT and less shock and firepower than an armored BCT, but the Marine expeditionary brigade can mitigate both with its air squadron. The Marine expeditionary brigade has its own sustainment unit but requires general support from an Army sustainment brigade for operations lasting more than 30 days. For protracted operations away from the Navy, the Marine expeditionary brigade requires health service support, and may require missile defense depending on the threat. The Marine expeditionary brigade requires Army engineer and CBRN support and typically receives additional specialized intelligence support.

5-81. A Marine Corps aviation combat element organized as part of the MAGTF includes Marine Corps air command and control system capabilities tailored for the size of the aviation combat element. Smaller regimental-based MAGTFs (with unmanned aircraft systems) may be integrated in a similar manner to BCTs. Larger MAGTFs bring the full joint capability to control airspace over the MAGTF area of operations. Large MAGTFs include a Marine Corps division and constitute a Marine expeditionary force. The Marine expeditionary force deploys with the full range of Marine Corps rotary- and fixed-wing aviation as well as a robust Marine Corps air command and control system. A joint doctrinal relationship exists between the JFACC and JFLCC. In operations involving a MAGTF, the Marines establish direct liaison within the air operations center to coordinate airspace and air operations directly with the JAOC.

JOINT CHEMICAL, BIOLOGICAL, RADIOLOGICAL, AND NUCLEAR ASSETS

5-82. The 20th CBRNE headquarters can act as a joint force component for elimination of WMD, or it can provide the basis for a CBRN task force under the OPCON of the JFLCC. Specialized capabilities from the Defense Threats Reduction Agency may augment the corps. A WMD coordination element from the 20th CBRNE may be attached to the corps of a subordinate division, depending upon the CBRN threat.

DECISIVE ACTION

5-83. The scope and scale of corps operations ensure that corps forces conduct simultaneous offensive, defensive, and stability tasks. For purposes of this section, the discussion of offense, defense, and stability considers that most corps forces are engaged in that related set of tasks. To understand decisive action in corps operations, this publication reviews two distinct roles for the corps. The first, and more common employment of the corps, is that of a land component command. As a land component, the corps functions at the operational level, translating campaign objectives into tactical tasks for subordinate units. The overall size of the land component varies, but it typically includes two or three divisions or their equivalent. In most campaigns, the land component is the principal component used by the JFC to achieve the end state.

DECISIVE ACTION AT THE OPERATIONAL LEVEL

5-84. Operational environments confronting the joint force land component are chaotic. Typically, the land component confronts hybrid threats, wherein the enemy includes a variable mix of conventional military units, SOF, well-armed and highly motivated paramilitary forces, loosely organized irregular forces, and armed, organized criminal organizations, including terrorists. The corps may also confront anti-access and area-denial threats, possessing sophisticated and asymmetric capabilities. The host nation, if friendly, may be under internal and external threats and have limited control over portions of its citizens. Indigenous government forces often lack adequate sustainment. Their ability to conduct combined arms operations is limited by equipment and training.

5-85. In this type of environment, the land component decentralizes the tactical conduct of operations to its subordinate divisions. Each division conducts offensive, defensive, and stability tasks as required to alter conditions within an operational environment. (See Part Four of this publication.) BCTs supported by

divisional units conduct offensive, defensive, and stability missions. The land component develops the land operation based upon lines of effort, assesses conditions, and resources the divisions. As the land component, the corps headquarters manages operational complexity—the myriad tasks associated with turning tactical success into operational-level progress towards the end state. The land component focuses on enabling divisions to complete the current phase of operations while simultaneously establishing conditions for tactical success in the next phase.

5-86. The land component commander adds or subtracts joint and Army capabilities from the divisions through the task organization, adjusts their areas of operations, and oversees their sustainment. As the ARFOR, the corps coordinates support from the theater army and supporting commands. In this type of operational environment, the ESC and medical brigade (support) provide support to the divisions on an area basis. The land component commander positions sustainment and medical resources, either within a division area of operations or in a support area. When the land component establishes a support area, it assigns it as an area of operations with responsibility to a subordinate unit such as a MEB. The land component maintains a relatively small and mobile reserve, often consisting of ground forces positioned centrally in the land component area of operations supported by joint and Army aviation. For example, the land component may direct a division to provide the reserve consisting of one infantry battalion and assault aviation assets sufficient to move it. The land component commander exercises OPCON of the reserve, although ADCON remains the responsibility of the division commander and parent brigades.

5-87. The land component commander primarily establishes the conditions for successive phases with joint capabilities, multinational forces, interagency coordination, and theater army support. Joint capabilities—particularly fires, network, intelligence, CEMA, SOF, and air movement—shape conditions across the joint operations area. The land component works closely with the JFACC to integrate air and land capabilities. Air movement of forces and logistics extends the land component's operational reach. The land component coordinates intelligence requirements through both the JFC and JFACC depending upon the source. The JFC provides CEMA support as requested and as made available through joint and strategic assets. The JFC establishes guidance and direction for unified action, but the details of interagency support and collaboration fall mainly on the land component (since these agencies operate in the land domain).

5-88. The land component and SOF exchange supporting and supported roles as the campaign progresses. As early as possible, the SOF component and land component exchange liaison and planning elements. The more closely the land component and SOF collaborate, the more effective land component and SOF operations become. The SOF aviation and ground elements receive critical support from the land component including sustainment, medical, and air and missile defense. The land component also provides artillery and aviation in support of special operations and may provide a combat reserve. When required, the land component may conduct operations to link up with and extract SOF units in the land component area of operations. In return, the land component receives intelligence, unconventional warfare, foreign internal defense, and counterterrorism support from SOF units.

5-89. Ideally, security cooperation requirements associated with rebuilding or re-equipping host-nation forces become the responsibility of the JFC and theater army. Although the land component commander remains responsible for tactical security cooperation requirements, the theater army should establish a separate command under the JFC as soon as possible to control large-scale restructuring of host-nation forces. Experience demonstrates that security cooperation that involves improvement or restructuring of the entire armed forces of a host nation can overwhelm the land component with concurrent requirements during decisive action.

5-90. The multinational command and control responsibilities of the land component are complex and time consuming. Although the multinational forces may make up a minority of the combat power within the combined land component, their employment requires the commander's careful attention. Again, capable liaison detachments become critical to effective command and control. The land component should receive a liaison element from each national force under its command, and any division controlling a multinational force receives a liaison detachment. Either the corps headquarters or the gaining U.S. division provides the U.S. liaison detachment. At a minimum, the land component ensures that the U.S. liaison detachment has reliable, network-capable communications able to convey and exchange the common operational picture. As conditions in the land area of operations permit, the land component commander should visit multinational forces frequently as well as consult with their liaison officers at the land component

headquarters. The commander ensures that the land component and U.S. divisions employ multinational forces to the maximum of their operational capability consistent with any limitations placed on their employment by their respective national command authorities. (Refer to JP 3-16 and FM 3-16.)

DECISIVE ACTION AT THE TACTICAL LEVEL

5-91. When the corps functions as a tactical headquarters, a potential operational environment and role of the corps differs from that of a joint force land component. The corps serves as a tactical echelon, commanding divisions as part of a much larger joint and multinational force. The Army corps can expect to operate adjacent to a Marine expeditionary force, such as it did in Operation Iraqi Freedom I in 2003 under the command of Third U.S. Army. In an alliance or AOR-wide war, the corps may operate with adjacent multinational corps as part of an Army group or equivalent, which in turn falls under a ground component command or equivalent. The corps functions at the tactical level despite controlling multiple divisions while a land headquarters one or two echelons higher serves as the operational land component.

5-92. In this operational environment, the corps combines offensive and defensive tasks with simultaneous stability tasks incident to its combat missions. The higher land headquarters establishes the corps task organization and area of operations. Both change according to the tactical situation. In general, the corps area of operations is smaller, the higher land headquarters uses boundaries, together with permissive and restrictive control measures to de-conflict and regulate the corps operations with adjacent and following units. The degree of control exerted by the corps over the divisions is greater because of the need to synchronize operations with adjacent corps and Army-level formations.

Offensive Tasks

5-93. In major operations involving large-scale combat, the corps conducts all four primary offensive tasks—movement to contact, attack, exploitation, and pursuit. (See ADRP 3-90 for offensive tasks.) The corps commander's primary means of attack are the divisions under corps command. The corps monitors the divisions' operations and focuses on establishing conditions for tactical success during the next phase of operations. The corps' means of shaping and establishing conditions for offensive operations are primarily joint capabilities provided through the JFC. The corps commander's options for affecting current operations include—

- Maintain a personal presence.
- Change the task organization of the corps.
- Modify the area of operations of subordinate units.
- Reinforce a committed division with corps assets.
- Change the priorities and distribution of support for joint and Army capabilities.
- Commit the corps reserve.

Movement to Contact

5-94. The corps may conduct a movement to contact with divisions abreast, with each division conducting a movement to contact in its area of operations. As an alternative, the corps may lead with one division and follow with another. Figure 5-3 on page 5-22 illustrates two divisions conducting a movement to contact with one division leading. The lead division is the decisive operation and the trail division follows and supports. In some situations, the trail division could have a follow-and-assume mission. The lead division engages and destroys enemy security forces. The trail division eliminates bypassed enemy forces, secures key terrain, screens the flanks of the corps, and conducts stability tasks. It also provides one infantry BCT as the corps reserve. The trail division eliminates bypassed enemy forces, secures key terrain, and conducts stability tasks. Depending upon the mission variables, the trail division may assume decisive operations. The corps reserve is an infantry BCT positioned at an airfield in the corps area of operations. When the reserve is committed, the corps provides aviation support and intratheater airlift. The corps normally uses phase lines to control an operation as the divisions advance. If the lead division encounters a prepared enemy defense, the corps transitions to a deliberate offensive operation. If the enemy is unprepared or defending weakly, the corps conducts hasty offensive operations and exploits any favorable situations. (See ADRP 3-90.)

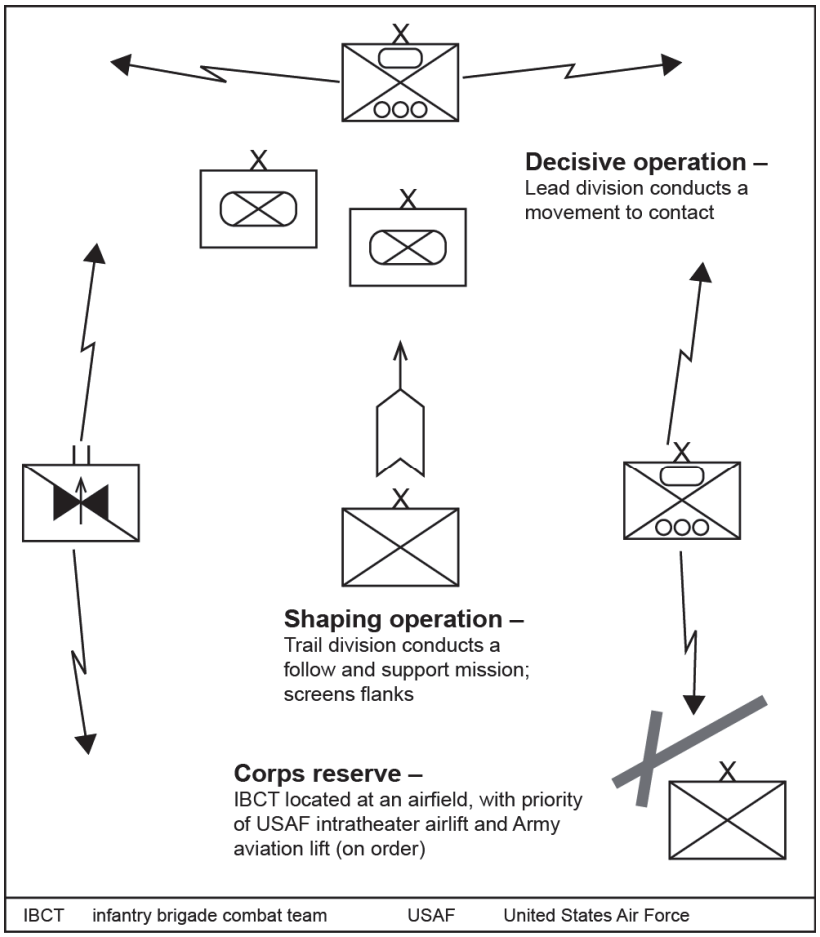

Figure 5-3. Example of corps movement to contact

Attack

5-95. The corps employs multiple divisions in the attack. Normally, the corps attacks with two or more divisions abreast and one or two divisions following, either in support (follow and support) or prepared to continue the offense (follow and assume). The corps commander normally retains one BCT uncommitted as the corps reserve.

5-96. If the situation permits, the corps fixes the main enemy defense using feints and limited attacks, while conducting a turning movement with two divisions. Figure 5-4 illustrates a four-division corps attack using two divisions to conduct a turning movement. The corps commander weights the turning movement (decisive operation) using a second division with two BCTs to follow and support. The divisions in the turning maneuver receive all available corps and joint assets. The corps commander retains one BCT in reserve.

5-97. If the corps cannot envelop or turn the enemy's defense, the corps then conducts a penetration. Typically, the corps concentrates one division on a narrow area of operations and places a second, larger division in position to follow and assume. The corps makes the penetration division the main effort and the follow-on division the decisive operation as soon as the penetration allows exploitation. The other divisions conduct shaping attacks, military deception, and economy of force operations.

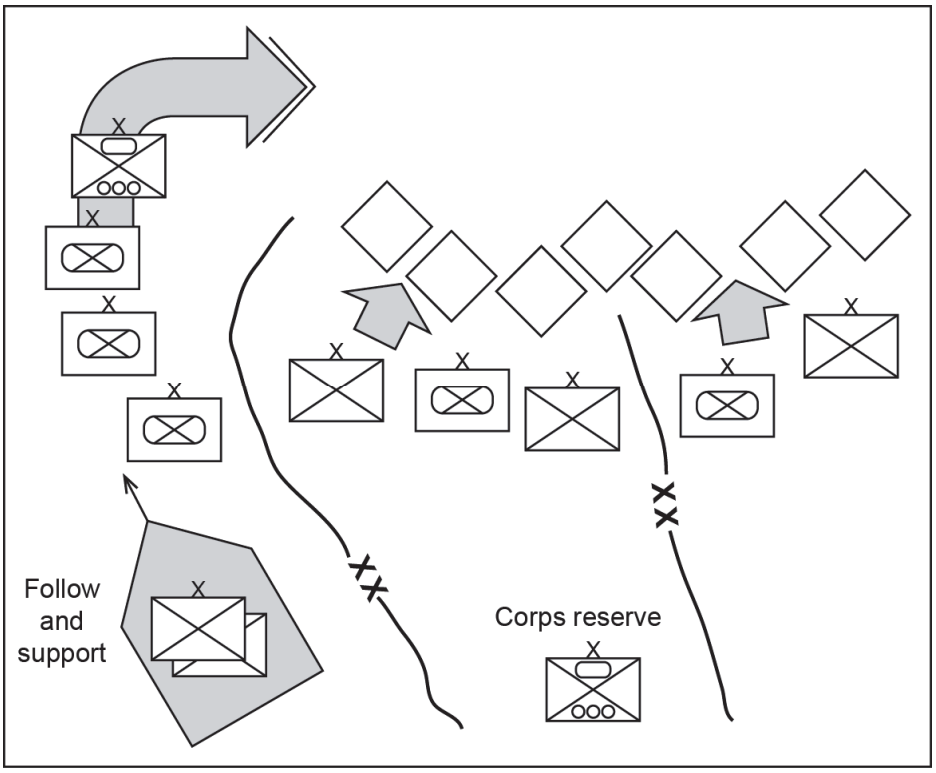

Figure 5-4. Example of corps attack

Exploitation

5-98. Exploitation follows a successful deliberate offensive operation; therefore, the corps staff develops branch plans to exploit any deliberate offensive operation. The corps exploits to dislocate defending forces not defeated in the initial attacks and to seize terrain that allows for further exploitation and precludes enemy re-organization and counterattack. As the enemy reacts to the rapidly changing situation, the corps commander shapes through interdiction and attacks on enemy command and control. The objective of the attack becomes the integrity of the enemy's defense. As the enemy's cohesion deteriorates and it attempts to move forces, the corps employs available air support to destroy enemy forces and prevent the enemy from re-establishing an effective defense. If the enemy forces remain in or near their original locations, the corps encircles and destroys as much of the enemy forces as possible. If the enemy attempts to extract enemy units, the corps transitions to pursuit.

5-99. The corps commander should anticipate the transition to exploitation and immediately shift assets to that division enjoying success. Often success disorganizes the attacker; therefore, the corps commander should have resources for reinforcing success and retaining the initiative. This does not necessarily mean that the corps will control the exploitation. Initially, the corps reinforces the division that achieves its objectives and detects opportunity. When and if the initial attack produces an operationally significant change in the situation, the corps redirects assets to reinforce success. At that point, the commander commits the corps reserve and reconstitutes the corps reserve from other assets. Sustainment assets not already placed in direct support to the corps should now pass to direct support of the corps, with be-prepared missions to provide direct support to exploiting divisions.

5-100. The challenge for the corps commander and staff is keeping the corps focused on the next operation after the completion of the current phase. The corps commander should be thinking several engagements ahead of the current situation. Critical decisions concerning logistics, follow-on operations, and reconstitution of depleted units need to be made well in advance. In particular, the corps commander calculates the operational reach of the corps and anticipates the likely culmination of the current offensive

operation. This allows the corps to impose, remove, or adjust control measures and retain the initiative for as long as possible.

Pursuit

5-101. The pursuit is highly decentralized tactically with divisions conducting hasty operations based upon the situation. Even with advanced mission command systems, the corps' understanding of the situation lags behind the situation reported in lower echelons. Before the corps releases divisions to pursue, the corps commander should update the commander's intent, stressing the priority between tactical tasks and outlining acceptable risks. Corps orders should adjust control measures, particularly division area of operations and the FSCL.

5-102. The most important changes the corps needs to make concern support of the divisions. Because the pursuit is highly decentralized and the situation changes so rapidly, the corps commander may request TACON over the ESC and its sustainment brigades. Once that change to the corps organization is granted, the corps commander adjusts priorities of support and may elect to place sustainment units in direct support of each division engaged in the pursuit. The ESC commander recommends the most effective use of sustainment assets to support the corps across rapidly increasing distances. The corps requests intratheater lift from the JFACC to support distribution of logistics to pursuing units. Simultaneously, the ESC and corps plan the sustainment posture of the corps following the pursuit. The corps develops the plan for the tactical positions and missions of the combat units of the corps. The ESC plans for additional bases and the transportation assets that move to them.

5-103. A critical consideration during pursuit operations is the handling of enemy prisoners of war. The ESC and MP brigades not only plan for supporting large numbers of enemy prisoners of war, they develop plans to move them to detention facilities. Initially the divisions control enemy prisoners of war, but the corps should accept enemy prisoners of war from the divisions as soon as possible. Large numbers of enemy prisoners of war can slow down the pursuit and block available lines of communications more than enemy resistance if the corps does not enforce movement discipline on corps routes and evacuate enemy prisoners of war rapidly and efficiently. Corps aviation assets can shift supplies and personnel forward to take control of enemy prisoners of war until ground transportation catches up with the offense.

Defensive Tasks

5-104. As a tactical land headquarters, the corps may conduct defensive operations. This often occurs during the initial stages of a campaign when the joint force is deploying and before friendly combat power becomes too great for the enemy to defeat. Since World War II, large enemy offensive operations offer an opportunity to employ the full capacity of American air, sea, and land powers to destroy the enemy's best ground forces quickly. If joint operations can destroy the enemy's offensive capability, the subsequent campaign can eliminate residual enemy combat power much more easily.

5-105. The corps combines area and mobile defense based upon the commander's intent and higher headquarters concept of operations. The corps may also conduct retrograde operations. (See ADRP 3-90.) When defending in an area of operations, the corps organizes the divisions and assigns their areas of operations based upon defeating the enemy's main effort. The corps commander organizes the corps defense in depth, allowing the committed divisions maneuver room to conduct their own mobile defense. The area selected by the corps for defense by the committed divisions becomes the main battle area of the corps. Ideally, the committed divisions should have enough depth to conduct covering force operations before the enemy contacts with the main force of each division. The corps commander accepts risk to mass combat power in depth along the enemy's main axis of attack. The corps reinforces the main effort division with additional fires, engineer support, and attack aviation, and allocates it priority of air defense support.

5-106. The corps positions the ESC and other sustainment assets outside the main battle area and protects them against enemy unconventional forces and missile attack. Due to the fluidity of the defensive battle, the ESC normally is in direct support of the corps and positions itself in the JSA. Sustainment brigades move to positions behind the committed divisions in the main battle area. The corps may request TACON of sustainment brigades near the main battle area if the tactical situation becomes fluid and the corps needs to make rapid changes to division boundaries.

5-107. The corps commander shapes the defensive battle through surveillance and reconnaissance, joint fires, and CEMA before the enemy reaches the main battle area. The corps focuses on disrupting the enemy's attacking forces before they encounter the main battle area and break up the enemy's combined arms capability. Targeting should attack both the weapons and the command and control for that enemy unit or system. The corps commander pays particular attention to disrupting the enemy's command and control, with intent of making the enemy more vulnerable to the corps counterattack.

5-108. The corps maintains the most powerful reserve possible, typically a division, with the intent of not only defeating the enemy's attack, but also regaining the initiative. The corps accepts risk to counterattack at the time and place when the attack enemy culminates before the enemy has time to consolidate and reorganize. If successful, the corps counterattack becomes the opening maneuver for a friendly counteroffensive. Figure 5-5 illustrates a corps defense.

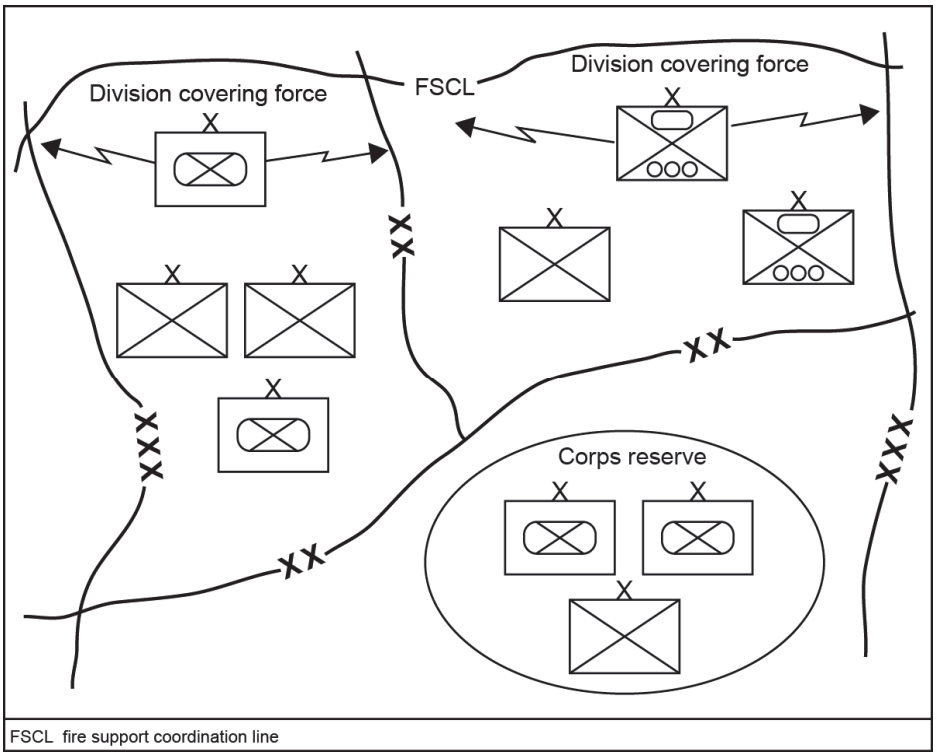

Figure 5-5. Example of corps defense

Stability Tasks

5-109. All corps operations conducted outside the boundaries of the United States involve stability tasks. In most campaigns, the corps commits more effort over time to stability tasks than to offensive or defensive tasks. The corps determines the lines of effort and priorities for stability tasks for the land areas of the joint operations area and translates them into orders to the subordinate divisions and brigades.

5-110. The corps headquarters analyzes the situation to determine the essential stability tasks and the priority associated with each task. The priorities and effort given to stability tasks vary within subordinate units' areas of operations. This analysis includes a planned transition to stability priorities when offensive and defensive operations are executed. Stability tasks during offensive operations include restoration of essential services and populace control in areas controlled by advancing forces. During defensive operations, forces protect civilians from enemy attacks, maintain control, or evacuate civilians from areas of operations controlled by friendly units. Initially, stability tasks may be incident to combat operations. The divisions will not be task-organized to conduct stability-intensive operations but should include civil affairs units. The corps retains control over forces such as MP and engineers so it can reinforce divisions or

conduct stability tasks directly. As requirements for combat diminish, the corps adjusts the task organization of divisions for anticipated or known stability operations.

5-111. The corps staff plans for logistics and medical support to indigenous populations affected by combat operations. As the joint force land component, the corps works directly with host-nation authorities to identify minimum-essential support that U.S. forces must provide to meet international accords. The corps staff collaborates with the joint staff and theater army to forecast requirements for each successive phase of operations. As required, the theater army requests additional Army units to manage stability tasks in the joint operations area.

5-112. The civil affairs brigade normally attached to the corps is a critical resource. Civil affairs personnel assist in identifying stability requirements and identifying tasks in planning for stability operations and their associated transitions. Using this information, commanders plan the time and method to task-organize forces, re-allocate areas of operations and priorities of support, and request additional forces to perform the previously identified stability tasks. These additional forces include MP, medical, sustainment, civil affairs, MISO, general engineering, and EOD units. MP units provide population control and infrastructure security. Medical units provide public health services. Sustainment units provide food and water, including water purification and bulk water transport. Civil affairs, MISO, and other information-related capabilities conduct information-related activities to engage the population. They publicize curfews, checkpoint procedures, evacuation routes, food and water distribution points, emergency health care, and vector control. General engineering units repair infrastructure or provide emergency shelter. EOD units clear unexploded ordnance based on the scope, scale, and duration of the requirements.

Defense Support of Civil Authorities

5-113. The corps headquarters may deploy to support domestic civil authorities for military activities known as DSCA. DSCA applies to domestic emergencies, designated law enforcement support, and other activities upon request for assistance from civil authorities. It includes operations that address the consequences of natural or man-made disasters, accidents, terrorist attacks, and incidents in the United States and its territories. Army forces conduct DSCA operations when civil authorities request assistance and the Secretary of Defense concurs. In DSCA, military forces always play a supporting role. State and federal laws define how military forces can support civil authorities. Often, a state's National Guard forces, acting in their state capacities under Title 32 are enough to provide an adequate response to a situation. However, when these forces are not enough, governors may request additional support from federal authorities.

5-114. The unique domestic environment limits the corps headquarters' role in DSCA. Two circumstances might involve the corps with a DSCA mission. In the first circumstance, the corps headquarters battalion may provide troops and support to civil authorities within the scope of immediate response authority. This assistance involves unit-level deploying unarmed Regular Army Soldiers and equipment to a disaster scene to save lives and mitigate suffering. Regular Army Soldiers providing immediate response may not perform any law enforcement activities outside their installations. A corps commander as the senior commander on an Army installation could order this type of response, but beyond 72 hours, it requires DOD approval. (See ADRP 3-28.)

5-115. The other circumstance might be a catastrophic incident that initiates cascading deterioration of infrastructure and services. In that event, an Army corps could deploy to command ground forces as part of a multi-division federal response. Although disasters occur every year in the United States, a disaster of this magnitude rarely occurs. In an extreme emergency, the size of the federal military commitment may require mission command system capabilities provided by a corps headquarters. However, the scope and scale of such a catastrophe would exceed current U.S. Government planning and response capabilities. If alerted, the corps headquarters exercises command over joint military units involved in DSCA over a multistate area. On order, the corps passes to the OPCON of USNORTHCOM with USARNORTH functioning as the ASCC. The corps does not become an ARFOR; USARNORTH retains that responsibility. For planning purposes, the corps should deploy an augmented tactical command post to the disaster region while continuing to operate the main command post from home station. The corps should organize and prepare to deploy numerous liaison teams equipped with high-mobility vehicles, military and civil communications,

and 72 hours of sustainment resources. Unless expressly authorized by the Secretary of Defense, all personnel deploy without weapons. (See ADRP 3-28 for additional information.)

OPERATIONAL FRAMEWORK

5-116. The corps commander uses the operational framework to relate time, space, and purpose within the concept of operations. ADRP 3-0 articulates common operational frameworks for commanders to visualize and conceptually organize operations: decisive, shaping, and sustaining or deep, close, and security. As an operational headquarters, the corps typically frames operations using decisive, shaping, and sustaining. When serving as a tactical headquarters, the corps typically frames operations in terms of close, deep, and security.

DECISIVE, SHAPING, AND SUSTAINING FRAMEWORK

5-117. The corps normally uses the decisive, shaping, and sustaining framework when it is the joint force land component unless the JFC dictates otherwise. The decisive land operation directly performs the most essential task of the joint force land component for that phase of the campaign. The corps commander conducts decisive operations by—

- Task-organizing the division for the decisive operation.
- Allocating resources by establishing priorities of support.
- Echeloning combat power.
- Assigning appropriate areas of operations.
- Employing other forces to shape conditions to guarantee success of the decisive operation.

Decisive Operations

5-118. Weighting the decisive operation requires the corps commander to accept risk to guarantee the success of the decisive operation. Each division commander requests enough combat power to guarantee that division's success. The most common mistake made in developing the plan for the corps is minimizing the combat power allotted to the decisive operation to maximize combat power in each division's area of operations. The decisive operation requires more than priority of fires or sustainment. It requires the preponderance of the corps' combat power, while the shaping operations receive the minimum combat power necessary for their missions. If shaping and decisive operations require more combat power than the corps can provide simultaneously, the corps commander phases the operations to allow combat power to transfer from shaping to the decisive operation when the latter begins.

Shaping Operations

5-119. At the corps level, depth and timing distinguish shaping operations. Given the operational reach of the joint force, shaping operations extend to the limits of the joint operations area, although the majority of shaping occurs within the corps area of operations. Shaping operations set the necessary conditions for success of the division conducting the decisive operation. Shaping operations set the conditions for the decisive operation by preparing and isolating the battlefield, disrupting the enemy's ability to synchronize forces, deceiving the enemy, and delaying entry of enemy reinforcements to the main battle area. A shaping operation can be one of several actions within the scope of decisive action. The corps commander uses joint capabilities including joint intelligence, joint fires, CEMA and SOF with decisive action to shape conditions.

5-120. When serving as an operational-level land headquarters, corps shaping operations focus on setting favorable conditions for the decisive operation in next phase of the campaign. Tactical management of battles and engagements pass to the divisions; the corps commander plans decisive, shaping, and sustaining operations weeks ahead. The commander's understanding of an operational environment becomes vital. The commander visualizes changes occurring in each operational variable because of current operations. Some variables are direct; many others are indirect and difficult to predict accurately. The corps staff, with the joint staff, forecasts a likely operational environment for the next phase of operations, highlighting those conditions that the corps can alter directly, such as enemy military capability, or key economic

infrastructure. The staff anticipates direct and indirect changes in an operational environment and explores a range of shaping actions. The tools applied include analysis of the center of gravity, decisive points, lines of operation and effort, and risk. The methods used by the staff to develop their analysis often include a combination of operational design and the military decisionmaking process. (See ADRP 5-0.) The crucial determinant is available combat power and the need to balance it between current operations and shaping for the next operation. The corps commander and staff must maintain this operational-level perspective, recognizing that at their level what comes next is more important than details of current tactical operations.

Sustaining Operations

5-121. Effective sustainment ensures freedom of action, extends operational reach, and prolongs endurance. It provides support at the right place, at the right time, and in the right quantity. Because operational reach underpins all corps maneuver, sustainment is intrinsic to the corps scheme of maneuver. Operational-level maneuver demands anticipation, careful planning, and synchronization of sustainment with corps operations. The key to sustaining operations depend on the supporting and supported commanders understanding requirements, capabilities, priorities, and the operational environments. An effective single logistics chain anticipates the requirements of the corps commander and minimizes the logistics footprint, facilitating operational reach and increasing tempo. Sustainment at this level depends on preparation well before the decisive operation occurs and becomes closely linked with shaping operations. In other words, the corps not only shapes to set conditions for the decisive operation, it shapes to ensure the success of sustaining operations. Sustaining operations focus on friendly forces rather than on the enemy or environment. The corps commander considers the operational reach of the corps in terms of logistics capacity, distribution, evacuation and treatment of casualties, and personnel services. The corps—

- Assesses the sustainment posture of the corps.
- Positions and protects sustainment and medical units.
- Establishes priorities of support.
- Establishes a corps or joint support area as required or directed.
- Secures and maintains lines of communications with Army and host-nation forces.
- Manages movement of corps forces and coordinates across the corps for movement of sustainment units.

5-122. Normally, the ESC and its subordinate organizations provide direct support to the corps when it is the joint force land component and ARFOR. The MEDCOM (DS) does so also. The JFC and TSC commanders specify the relationship in their operation orders. Collaborative planning and continuous coordination among the TSC, MEDCOM (DS), ESC, and the corps staff develops the situational understanding necessary for synchronizing and integrating sustaining operations with the corps concept of operations.

5-123. The corps staff coordinates movement of troops, equipment, and supplies across the corps area of operations and establishes priorities for movement for specified elements within the areas of operations of its subordinate formations. Movement control involves planning, routing, scheduling, controlling, and coordinating personnel, units, equipment, and supplies moving over multiple lines of communications. The transportation element within the main command post sustainment cell plans and monitors movement in the corps area of operations. The movement and maneuver cell executes terrain management for the commanding general.

5-124. The corps establishes a support area when required. The support area requires a controlling headquarters; the minimum responsible echelon is a MEB. For major operations, considerably greater capabilities may be required. This may include a multinational division, regional support groups, and possibly the corps tactical command post reconfigured to control the support area.

5-125. When the corps is a tactical echelon, it plans for displacement of the support area based upon the adjustment of tactical areas of operations. For example, a multinational force land component commander adjusts the rear boundary of the corps in a very large combat operation. Displacing the support area normally entails more time and effort than shifting a division. Many units operating in the support area are not 100-percent mobile (including the corps main command post). The corps plans to displace the support area based on movement, general engineering, security, and protection capabilities.

DEEP, CLOSE, AND SECURITY OPERATIONS

5-126. The corps typically uses the deep, close, and security operational framework when it is a tactical land headquarters operating adjacent to other corps-sized formations. The multinational or joint force land component commander develops a concept of operations and describes the conduct of operations in terms of space (distance from the main battle area) and time (enemy forces more distant require more time to enter the battle).

5-127. The corps deep operations begin beyond the division's forward boundary and extend to the limit of the corps assigned area of operations. Deep operations are normally those conducted against the enemy's forces, functions, or resources not engaged against the committed divisions. Commanders attack simultaneously across great depth and breadth in a manner that appears as one continuous operation to overwhelm and demoralize the enemy. Deep operations are not necessarily a function of geographic distance, but rather a function of the intent of the operation. Deep operations nullify the firepower, disrupt the command and control, and impair the synchronization of enemy forces. Commanders combine maneuver, joint fires, MISO, and CEMA supported by intelligence to conduct deep operations.

5-128. The corps close operations usually include operations of the committed divisions. The divisions in the main battle area develop their own nested deep, close, and security operations.

5-129. Security operations involve efforts to provide an early and accurate warning of enemy operations and to provide time and maneuver space within which to react to the enemy. These operations protect the force from surprise and develop the situation to allow the commander to use the force effectively. Security operations include necessary actions to retain freedom of action and ensure uninterrupted support or sustainment of all other operations. The security area is that area that begins at the forward area of the battlefield and extends as far to the front and flanks as security forces are deployed. Forces in the security area furnish information on the enemy; delay, deceive, and disrupt the enemy; and conduct counter-reconnaissance. A commander may conduct security operations to the front, flanks, or rear of the friendly force. (See ADRP 3-90.) Corps security operations emphasize protection of support areas and the JSA, if the latter is a corps responsibility. The corps employs combined arms to defeat conventional and unconventional threats detected in the support areas.

5-130. When fighting as a tactical land headquarters, the entire corps area of operations moves, not just the divisions' subordinate forces and areas of operations. For example, as the corps advances, the Army may shift the rear boundary of the corps forward. This means that the corps needs to reposition sustaining assets and corps units in advance of the change in boundaries.

MAIN AND SUPPORTING EFFORTS

5-131. The corps designates a main and one or more supporting efforts in either operational framework. This confers temporary priority of all available resources to that unit designated as the main effort. At the corps level, this normally is one of the divisions. However, it could be a unit or temporary group of forces performing a particular task. For example, the corps may plan and execute a military deception operation. The headquarters managing the deception may become the main effort. All other units provide support as directed by the corps headquarters or in accordance with priorities of support.

THE CORPS AND FORCIBLE ENTRY OPERATIONS

5-132. At the operational and strategic levels of war, the Armed Forces of the United States must be capable of deploying and fighting to gain access to geographic areas controlled by hostile forces. Forcible entry is the seizing and holding of a military lodgment in the face of armed opposition. Forcible entry operations constitute a unique subset of decisive action. Forcible entry operations range in scope from an operation designed as an initial phase of a campaign or major operation to a coup de main in which the decisive results are accomplished in one swift stroke. Forcible entry operations combine large-scale offensive, defensive, and stability tasks during the simultaneous deployment and employment of Army forces. Forcible entry operations are inherently joint operations; they comprise the most dangerous and most closely synchronized combat operations conducted by the Armed Forces.

5-133. The U.S. military maintains three primary forcible entry capabilities or options: amphibious assault, airborne assault, and air assault. Local air and maritime superiority are essential for the duration of the entry operation. The JFC seeks comprehensive control of a potential operational environment, permitting as many such options as possible to frustrate enemy plans. JFCs may select one entry capability or a combination of capabilities based upon METT-TC. The JFC may task JFLCCs to perform the detailed planning for a forcible entry operation. (See JP 3-31.)

5-134. Army forces may conduct parachute assault, air assault, or amphibious operations as part of a joint forcible entry operation. The forcible entry itself may use any combination of the means of entry to seize and hold a lodgment. The forcible entry force normally consists of one or multiple assault echelons if the JFC combines different means of forcible entry. The assault echelon seizes key terrain necessary to accept additional friendly forces, usually an existing airfield or port, or critical choke points to deny enemy access to the airhead or beachhead, such as bridges or mountain passes. A reinforcing echelon follows the assault echelon immediately, deploying sufficient combat forces and sustainment to expand the lodgment and defend it against immediate enemy counterattack. The expanded lodgment should be large enough to accommodate the entry of follow-on forces by air and sealift. If the JFC intends to initiate major operations from the lodgment, follow-on forces deploy into the lodgment, complete RSOI, and conduct operations as required by their component headquarters.

5-135. If the Army provides the preponderance of forcible entry forces, the corps may be designated as the JTF headquarters. The division providing the assault echelon becomes the assault force headquarters and the ARFOR. If the forcible entry involves a simultaneous amphibious assault by Marine Corps forces, Navy forces control the amphibious portion of the operation, the ARFOR conducts the parachute assault, and the JTF synchronizes both operations. The Service components may transition into a joint force land component after the airhead and beachhead join into a single lodgment. At this point, the combatant commander adjusts command and control of the operation based upon the objectives of the campaign.

5-136. Following seizure of the lodgment, the corps may remain the JTF if the land operation remains a division-sized effort, with a MEU under the TACON of the Army division. (See chapter 7.) However, if the campaign requires the deployment of significant follow-on forces, either a full Marine expeditionary force or a second Army division, the combatant commander may replace the corps as the JTF headquarters. At the point when a second division begins to arrive, the combatant commander and GCC may assume control and the corps transitions to a tactical headquarters and the ARFOR. Alternatively, the corps may serve as the joint force land component with command of a Marine Corps division, while the Marine expeditionary force headquarters can become the JTF. During the transition, the corps tactical command post, with augmentation, may exercise TACON or OPCON over Marine Corps and Army forces until the main command post becomes operational.

5-137. When the corps is not the JTF, it provides command and control expertise and augmentation to the fleet and Marine Corps headquarters when controlling an amphibious assault combined with Army parachute and air assault. The corps provides additional staff and communications as required to the Army division providing the parachute forces. The corps also organizes and runs the deployment of the Army division's assault echelon and reinforcing echelons. (For more information on joint forcible entry operations, see JP 3-18.)

PART THREE

The Army Division

Part three discusses the Army division headquarters and operations at the division echelon. The Army division's primary role is command of Army brigades in combat operations across the range of military operations. Its other roles include serving as a joint force land component (and Army component) under a joint task force and as a joint task force headquarters (with joint augmentation) in a limited contingency operation.

Chapter 6

Division Roles and Organization

ROLES OF THE DIVISION

6-1. This chapter discusses the division's roles and organization. The division commands multiple Army brigades and is the Army's primary tactical headquarters for decisive action. When required it may serve as a JTF or joint force land component headquarters in a limited contingency operation. As required, the division may be the Army component (ARFOR) and the joint force land component within a JTF. When the division headquarters serves as a JTF headquarters or a joint force land component headquarters, it requires joint augmentation.

6-2. The division is the Army's primary tactical warfighting headquarters. Its primary role is as a tactical headquarters commanding brigades in decisive action. The division combines offensive, defensive, and either stability or DSCA tasks in an area of operations assigned by its higher headquarters, normally a corps. It task-organizes its subordinate forces according to the mission variables of METT-TC to accomplish its mission. Depending upon the METT-TC, the division commands between two and five BCTs and a mix of multifunctional support brigades.

Roles of the Division

- Tactical headquarters commanding brigade combat teams.
- Joint force land component command or multinational force land component for a small contingency operation.
- Joint task force for a limited contingency operation.
- ARFOR for a small contingency operation.

6-3. The division headquarters may serve as a joint force land component headquarters with joint staff augmentation (primarily Marine Corps) in a limited contingency operation. When required to serve as an ARFOR in a limited contingency operation, it normally requires support from an ESC. With extensive joint augmentation, it may serve as a JTF for a limited contingency operation. When serving as the ARFOR, joint force land component, or JTF, the division is primarily concerned with the conduct of operational tasks. The theater army provides most of the ADCON and Army support to forces deployed in the joint operations area. Joint manning documents specify other Service augmentation according to the role determined by the combatant commander, either as a JTF or as a joint force land component headquarters. When serving as a JTF headquarters, the division headquarters organizes and operates in accordance with joint doctrine. (JP 3-33 provides doctrine for the JTF, and JP 3-31 provides it for the joint force land component command.)

COMMAND BRIGADE COMBAT TEAMS

6-4. The striking power of the U.S. Army is concentrated in its BCTs. The division headquarters is organized, trained, and equipped to command between two and five BCTs in combat as well as support the BCTs with any mix of multifunctional support brigades. Because the BCTs and the division headquarters are modular, any division headquarters may command any mix of armored, infantry, and Stryker BCTs.

JOINT FORCE LAND COMPONENT COMMAND

6-5. In a limited contingency operation, the JFC may organize the JTF with the division as the joint force land component. The joint force land component of such a JTF may have TACON of Marine Corps and multinational forces. The Marine Corps unit may be a MEU, but is often smaller. When a MEU is under the control of an Army division, the division employs it as a BCT, although with different capabilities from the Army BCT. (See the discussion of Marine Corps forces in chapter 7.) The division headquarters receives staff augmentation from the Marine Corps and other Services, as well as individual Army augmentation and communications support from the theater army. Although the mix of other brigades varies according to the mission, the division should have OPCON of a brigade special troops battalion (BTSB) to meet the demand for intelligence and integration of collection assets.

6-6. When it is the joint force land component, the Army division becomes the ARFOR. As the ARFOR, the division retains OPCON of all Army forces not subordinated to another component of the JTF. To function effectively as both the joint force land component and the ARFOR, the division headquarters requires the support of an ESC and its sustainment brigades. The ESC normally operates in direct support to the division (ARFOR). This enables the division to oversee logistics and administrative support to all Army forces, while also providing logistics support to other Services and multinational units. Without it, the ARFOR responsibilities for sustainment would degrade the operational focus of the division. If the tactical situation permits, the division headquarters and ESC co-locate to integrate land operations and sustainment closely.

Note. If the scale of the operation requires only one sustainment brigade, the TSC commander may elect to deploy the brigade without an ESC.

MULTINATIONAL HEADQUARTERS

6-7. Either as a tactical headquarters or as a joint force land component, the division commands multinational forces. Normally, these forces are under the TACON of the division. Depending on the size of the multinational force, the division commander reorganizes the staff and command group. (See JP 3-16.) In Afghanistan, for example, American divisions frequently operated with a NATO general officer in their command group when the division commanded a brigade equivalent from that nation. The division commander may deploy the tactical command post to the command post of a large multinational formation to ensure that the multinational force has full connectivity with the division main command post. Normally, the division receives a digital liaison detachment to support this requirement.

6-8. The higher headquarters—corps, Marine expeditionary force, or combined JTF—assesses the additional load placed on the mission command system of the division headquarters as multinational forces come under the division's control. The division headquarters requires communications and personnel augmentation to fill liaison requirements. As the intensity of combat increases, the higher headquarters should assess the span of control of any division commanding multiple multinational brigade equivalents. Often as the division adds additional combat multipliers (fires, engineers, and sustainment), its agility decreases.

THE DIVISION HEADQUARTERS AS A JOINT TASK FORCE HEADQUARTERS

6-9. The division headquarters is not the preferred Army unit for a JTF headquarters; that is the corps. However, in a limited contingency operation involving limited combat, peace operations, or humanitarian operations, the division headquarters may become the base for a JTF headquarters. The division may fall in on a small theater army command post already deployed and use some of its personnel to accelerate JTF

staff integration. When it becomes a JTF headquarters, the division headquarters requires extensive augmentation, joint and Army. The combatant commander provides joint network capabilities and each Service provides command and control detachments. The USAF provides the JTF with a joint air component coordination element. (See discussion in paragraph 5-42.) Normally, Navy forces have a supporting relationship to the JTF if present. When the division headquarters becomes a JTF headquarters, it requires an ARFOR. The expeditious solution is to designate the division tactical command post as the ARFOR headquarters. The tactical command post, with an assistant division commander, co-locates with the largest brigade's command post and exercises OPCON over land forces. The division commander and the main command post form the JTF headquarters. The TSC tailors a sustainment task force to support the deployed Army force. Because of the limited size of the force, the TSC may place the deployed sustainment unit under TACON to the ARFOR.

LIMITATIONS

6-10. In large-scale operations, the division normally commands three or four BCTs, together with one of each type of multifunctional support brigade. (The discussion beginning in paragraph 6-17 covers multifunctional support brigades.) The division can command more than five maneuver brigade equivalents in a protracted land operation with limited combat and relatively static areas of operations. The division headquarters can become a joint force land component headquarters with command of a MEU, but it still requires Marine Corps augmentation. The division headquarters may become a JTF headquarters for a limited contingency operation, but requires extensive augmentation.

6-11. The division has a tactical command post and a main command post. The division's tactical command post is 100-percent mobile using organic transportation. The division main command post is not 100-percent mobile; it requires additional transportation to displace. It is also not fully transportable by C-130 aircraft and requires numerous C-17 sorties to deploy by air. Normally the main command post deploys by a combination of air and sealift; it also requires RSOI to reach full capacity. Neither command post has an organic security force. The division tasks a subordinate unit to secure the main and tactical command posts as required.

6-12. The Army has only one division headquarters trained and equipped to command airborne operations. When the airborne division conducts a large parachute assault, it requires extensive sustainment and intelligence support from the higher headquarters. Other divisions may command an airborne task force once it arrives on the drop zone. Only one Army division trains for multi-brigade air assault operations, although all divisions can conduct a one-brigade air assault operation with OPCON of sufficient aviation.

SUBORDINATE FORCES

6-13. The division's composition determines its capabilities. To achieve its full capabilities and be capable of conducting decisive action on a large scale, the division commands between two and five BCTs. The division also commands at least one of each of the multifunctional support brigades including combat aviation, fires, maneuver enhancement, and battlefield surveillance. One sustainment brigade supports the BCTs and modular brigades, normally on an area basis. One or more medical brigades provide health service support to the division on an area basis. The corps normally controls several functional brigades, including engineer, civil affairs, and network. The corps reinforces the division with assets from these brigades and specialized units.

BRIGADE COMBAT TEAMS

6-14. BCTs maneuver against, close with, and destroy the enemy. BCTs seize and retain key terrain, exerting constant pressure, and breaking the enemy's will to fight. They are the principal ground maneuver unit of the division. Three BCT designs make up the ground maneuver power of the division: armored, infantry, and Stryker. These BCTs have organic combined arms capabilities, including battalion-sized maneuver, field artillery, reconnaissance, and sustainment units. Each BCT has organic medical support. Division maneuver combines joint capabilities with the organic capabilities of the BCT to provide mutual support across large areas of operations and enable BCTs to conduct operations within contiguous or noncontiguous areas of operations. Figure 6-1 on page 6-4 shows the three types of BCTs.

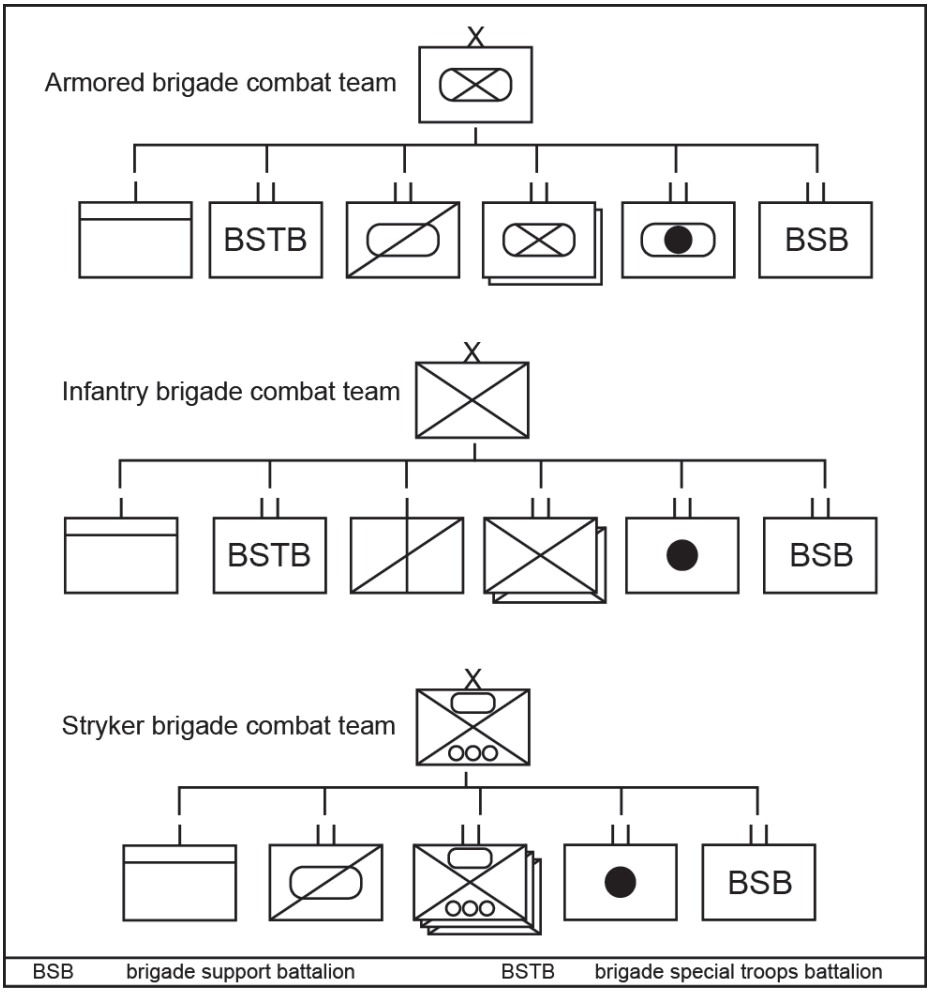

Figure 6-1. Three types of brigade combat teams (current organization)

6-15. The division task-organizes and assigns an area of operations to each BCT. The commander's intent and concept of operations allow a BCT to perform assigned tasks with minimum control from the division by use of mission orders. The BCT conducts decisive action. That does not mean that the BCT is ideal for all decisive tasks. The division normally allows the BCT commander to create task forces for specific missions. The BCT may require task organization changes, even for combat operations, because it does not have all the combat multipliers that are often required. For example, it does not have organic air and missile defense or engineer bridging assets.

6-16. The organization of BCTs will likely change during the lifespan of this publication. The Army plans to add a third maneuver battalion to the armored and infantry BCTs. The reconnaissance, surveillance, and target acquisition battalion then becomes a cavalry squadron with three reconnaissance troops. A separate headquarters and headquarters company then replaces the brigade special troops battalion. A new engineer battalion headquarters then commands the signal company, two engineer companies, and the military intelligence company. The engineer battalion organic to the armored BCT and infantry BCT will include assault bridging (the Stryker BCT already has this capability). The field artillery battalion receives a third firing battery, and the brigade support battalion will receive additional assets. The Stryker BCT organization will also change. Figure 6-2 illustrates an armored BCT with the expanded organization. Refer to FM 3-90.6 for detail on the organization of BCTs.

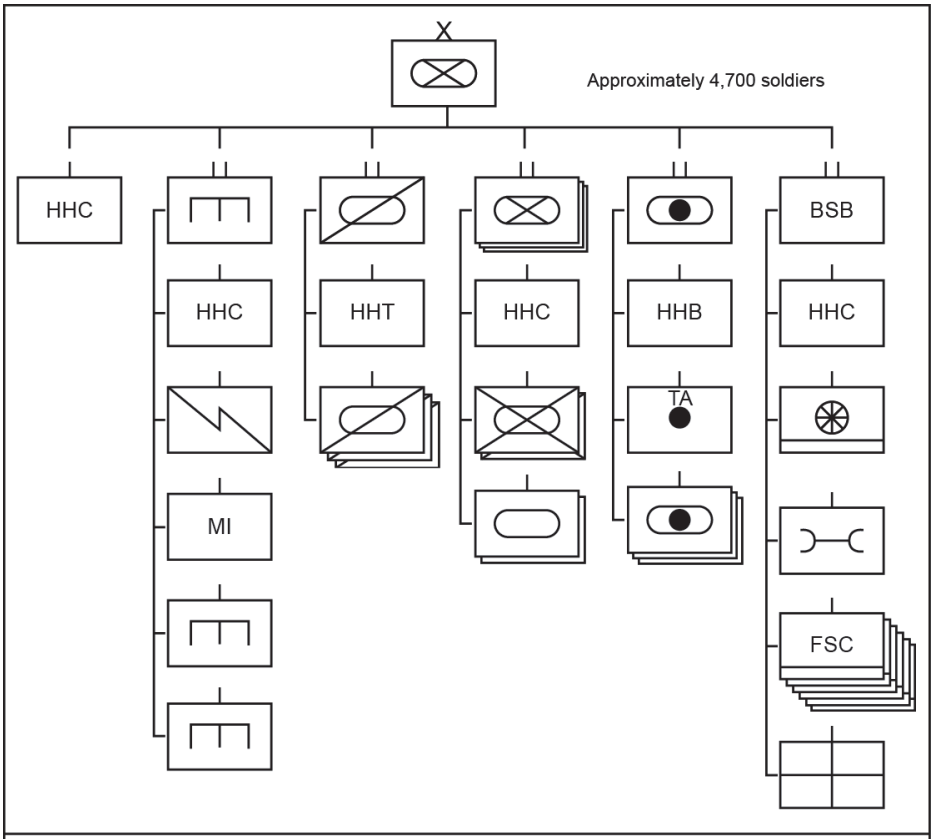

BSB	brigade support battalion	HHT	headquarters and headquarters troop
FSC	forward support company	MI	military intelligence
HHB	headquarters and headquarters battery	TA	target acquisition
HHC	headquarters and headquarters company		

Figure 6-2. Example of a reorganized armored brigade combat team

MULTIFUNCTIONAL SUPPORT BRIGADES

6-17. The modular force features five types of multifunctional support brigades that complement and reinforce the BCTs. These multifunctional support brigades are combat aviation, battlefield surveillance, maneuver enhancement, fires, and sustainment. These multifunctional support brigades are combined arms units that accomplish a broad mission such as protection, in the case of the MEB. Each multifunctional support brigade includes a headquarters, brigade troops, and specialized battalions. A mix of other specialized battalions is attached or OPCON to the brigade to match capabilities to requirements. During operations, the division commander task-organizes between the multifunctional support brigades and BCTs. Unlike the BCT, tailoring and task organization leads to considerable variation among multifunctional support brigades of the same type.

6-18. The multifunctional support brigades may occupy terrain within other BCT areas of operations and can conduct operations in support of BCT operations or in any area the division retains under its control. The BTSB collects information, the field artillery brigade accomplishes fires missions, and the combat aviation brigade conducts attacks and other operations in these division retained areas. (Paragraph 6-19 through paragraph 6-33 discusses the various types of brigades.)

Field Artillery Brigade

6-19. The field artillery brigade conducts operations to provide shaping and decisive fires for the division. Figure 6-3 illustrates a field artillery brigade. The field artillery brigade is capable of employing Army and joint fires as well as supporting SOF operations, electronic warfare, and airspace control elements. Field artillery brigades have the ability to reconnoiter, detect, and attack targets and confirm the effectiveness of their fires. They have the necessary capabilities to facilitate the efficient application of fires. The field artillery brigade provides the division with the following capabilities:

- Force field artillery headquarters for the division.
- Fires and counterfire for the division.
- Close reinforcing fires in support of BCTs.
- Fires, counterfire, unmanned aircraft system, and radar coverage for the combat aviation, battlefield surveillance, maneuver enhancement, and sustainment brigades.
- A headquarters able to control Army and joint fires.

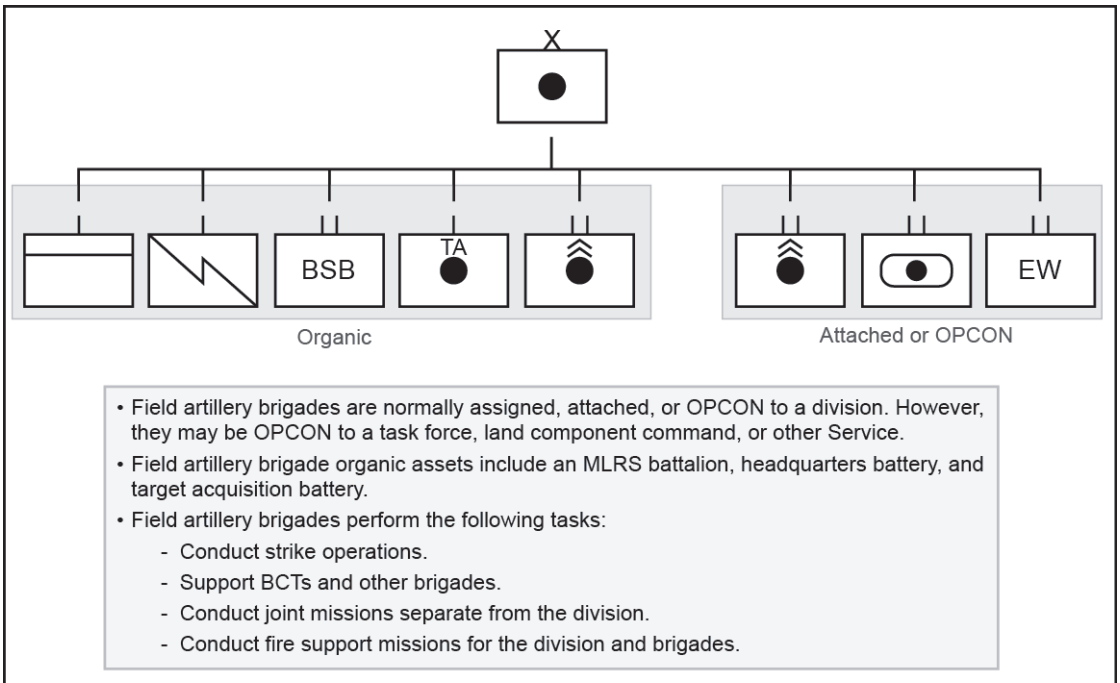

BCT	brigade combat team	MLRS	multiple launch rocket system
BSB	brigade support battalion	OPCON	operational control
EW	electronic warfare	TA	target acquisition

Figure 6-3. Field artillery brigade

Combat Aviation Brigade

6-20. The combat aviation brigade is the primary integrator of aviation assets within the division. The brigade must prepare to fight as a whole, support BCTs using pure or task-organized units, and accomplish multiple independent missions requiring pure or task-organized units. Each aviation brigade is tailored for specific missions; however, each accepts other organizations and accomplishes missions not necessarily defined in the table of organization and equipment (known as TOE) mission statement. Aviation brigade missions include reconnaissance, security, movement to contact, attack (interdiction, and close combat attack), air assault, air movement, aerial medical evacuation and casualty evacuation operations, personnel recovery operations, downed aircraft recovery, forward arming and refueling point operations, aviation maintenance, and air traffic services.

6-21. Combat aviation brigades come in three types: heavy, medium, and expeditionary. Each combat aviation brigade normally includes two attack reconnaissance battalions (or one battalion and one squadron), an assault helicopter battalion, a general support aviation battalion, an aviation support battalion, and typically an unmanned aircraft system company. Each brigade contains a headquarters and headquarters company providing personnel, equipment, and security and defense for the brigade command post. One combat aviation brigade normally supports the operations of each division with task-organized aviation capabilities. The bulk of Army aviation's combat power resides in the combat aviation brigade organized to support the division, the BCTs, and other brigades. Based on priorities and missions, the combat aviation brigade collaborates directly with supported brigades for operational details of the support required.

6-22. The combat aviation brigade (expeditionary) primarily supports homeland security. These operations include counterdrug missions, humanitarian assistance, disaster relief, civil disturbance, counterterrorism, and domestic support (for which the National Guard is uniquely suited to conduct). Elements of the brigade can be task-organized for deployment abroad.

6-23. The combat aviation brigade can accomplish a screen mission for the division. With artillery, ground maneuver forces, and other support, it can accomplish a guard mission. The combat aviation brigade normally supports a BCT in a covering force mission. Figure 6-4 illustrates the combat aviation brigade.

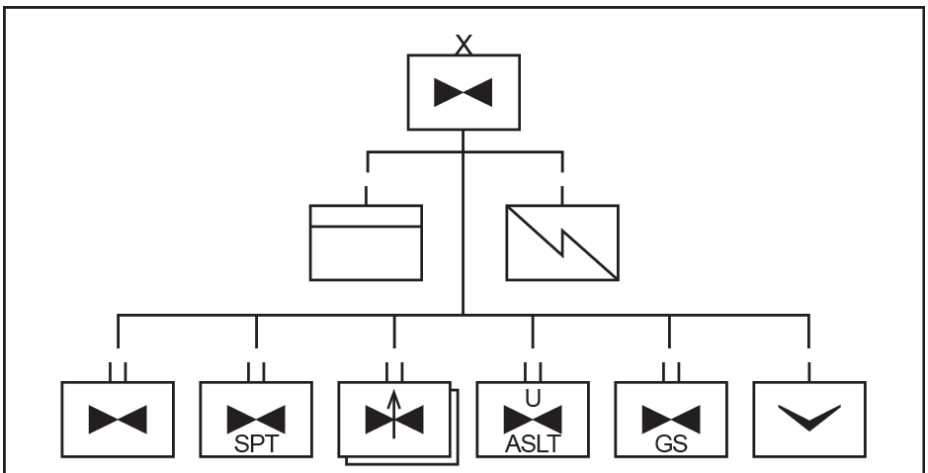

- The combat aviation brigade can support the joint land component, corps, division, or multiple brigade combat teams.
- It contains manned and unmanned aircraft systems.
- Tailored as a heavy, medium, or expeditionary combat aviation brigade according to the numbers and types of assigned aircraft.
- The combat aviation brigade normally accomplishes the following missions: reconnaissance, security (screen or guard), air assault, air movement of troops and equipment, support to mission command, aeromedical evacuation, personnel recovery, and downed aircraft recovery.
- The brigade also supports domestic missions such as search and rescue, firefighting, and movement of evacuees.

ASLT	assault	SPT	support
GS	general support	U	utility

Figure 6-4. Combat aviation brigade

Battlefield Surveillance Brigade

6-24. The BFSB collects information that answers the division commander's critical information requirements, specifically priority intelligence requirements, and other information requirements based on the priorities established by the division. The collected information focuses on the enemy, terrain and

weather, and civil consideration aspects of METT-TC. In turn, these feed the development and update of the division's common operational picture. Normally, the priority of the BFSB collection efforts is the division's area of operations outside the BCT's area of operations. It receives tasking from the division. The division commander describes the operation, identifies the commander's critical information requirements, and prioritizes other information requirements.

6-25. BFSB assets can provide direct or general support to the BCTs. The specific relationship depends on the capacity of the BFSB to effectively control and maintain these systems or formations and the ability of each BCT to receive, analyze, and disseminate the information received. The BFSB provides the intelligence gathered to commands at each echelon based on information requirements, regardless of the responsibility for an area of operations.

6-26. Normally the BFSB commander retains OPCON over all the BFSB assets involved in collecting information on enemy, terrain, and civil considerations in response to taskings from the division. The BCTs retain control of their collection assets but prioritize their collection efforts as required by the division plan. BFSBs may provide intelligence support to BCTs as designated by the division, corps, or JTF commander to include multifunctional teams, human intelligence collection teams, low-level voice intercept teams, counterintelligence teams, and long-range surveillance teams. (See figure 6-5.)

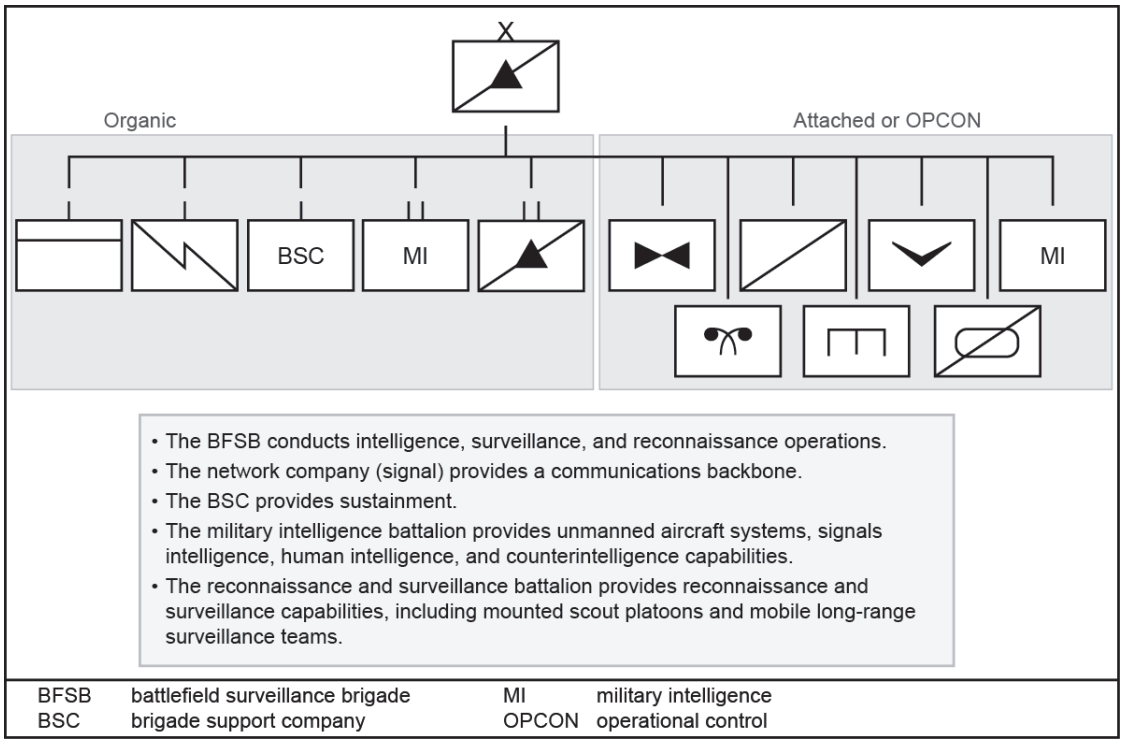

Figure 6-5. Battlefield surveillance brigade

6-27. The BFSB is a high-demand, low-density asset. The division frequently manages scarcity since there are not enough BFSBs to provide one to each committed division. In the absence of a BFSB, the division G-2 manages intelligence capabilities across the division. The division commander requests additional assets from the corps as needed.

Maneuver Enhancement Brigade

6-28. The MEB receives and controls forces that provide protection, mobility, and countermobility. The MEB is responsible for security within its assigned area of operations, which typically encompasses the support area and main supply routes. Typical missions include area security, line of communications security and maintenance, mobility and countermobility, vertical and horizontal construction, CBRN

defense, and limited offensive and defensive tasks. The organization of each MEB varies based upon the missions for which it is tailored. A typical force mix includes engineer, CBRN, MP, and EOD assets. In some circumstances, such as when the division is the initial entry force, the MEB may receive direct support from air and missile defense units, including short-range air defense and C-RAM systems. The brigade is also task-organized with a tactical combat force when assigned an area security mission.

6-29. The presence of a MEB within the area of operations does not supplant unit self-defense responsibilities. Units remain responsible for self-protection against Level I threats. The MEB provides forces to respond to Level II threats and, when task-organized with the tactical combat force, they can respond to Level III threats. The MEB has some area of operations-wide responsibilities for CBRN response and air and missile defense, when it controls these types of units. Figure 6-6 illustrates a MEB.

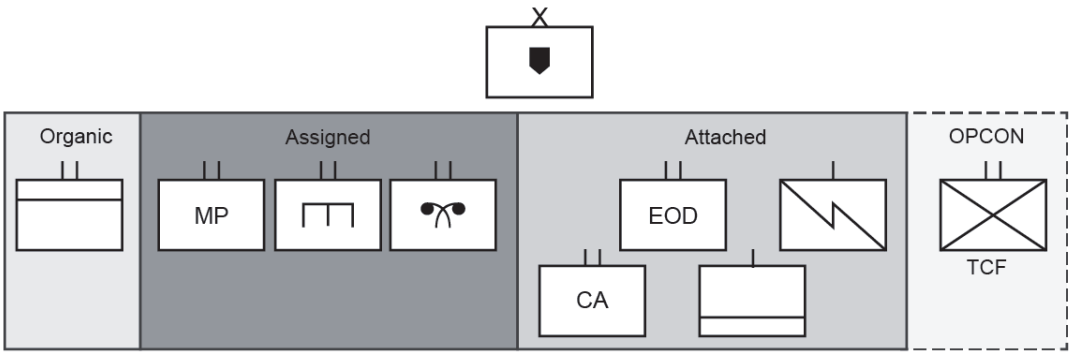

- The MEB commands units that protect and support the force as a whole.
- The MEB is designed to control engineers, MPs, CBRN, CA, AMD, EOD, and TCF.
- Typical missions include: area security, LOC security and maintenance, mobility and countermobility, vertical and horizontal construction, CBRN defense, limited offensive and defensive tasks, and consequence management.
- The MEB is not designed to screen, guard, or cover.

AMD	air missile defense	MEB	maneuver enhancement brigade
CA	civil affairs	MP	military police
CBRN	chemical, biological, radiological, and nuclear	OPCON	operational control
EOD	explosive ordnance disposal	TCF	tactical combat force
LOC	line of communications		

Figure 6-6. Maneuver enhancement brigade

Sustainment Brigade

6-30. Sustainment brigades are subordinate to the TSC (or by extension the ESC). The sustainment brigade is a flexible, multifunctional sustainment organization, tailored and task-organized according to METT-TC. It plans, prepares, executes, and assesses sustaining operations within an area of operations. It conducts sustaining operations and distribution management.

6-31. Sustainment brigades normally provide logistics support to the brigades of the division on an area basis. This support includes, but is not limited to, the provision of supplies, field services, as well as field and sustainment maintenance. One or more sustainment brigades may provide support for the combat operations of the entire division. Subordinate elements of the brigade support reconstitution for BCTs rotating out of combat operations.

6-32. The sustainment brigade coordinates the movement of sustainment convoys when moving through the area of operations of other brigades. A movement control battalion may be co-located with the sustainment brigade. The movement control team from the movement control battalion coordinates with the G-4 division transportation element to plan and control convoy movement throughout the division area of operations.

6-33. The sustainment brigade coordinates with the owning division commander for terrain within the division's area of operations. Normally the sustainment brigade operates from a support area. The division assigns responsibility for this area of operations to a MEB. When there is a serious and persistent threat to sustaining operations, or in the absence of a MEB, the division commander may assign an area of operations to a BCT within which the division concentrates its sustaining operations. Within the support area, the sustainment brigade answers to the MEB or BCT for protection, security, and related matters. The sustainment brigade establishes ground and aerial lines of communications to link the brigade support areas to the sustainment brigade area and back to the theater base. It is important to note that command and support relationships may change during different phases of the operation. The division should plan for security of ground and aerial lines of communications that link the sustainment brigade area with the theater base. Figure 6-7 illustrates a sustainment brigade.

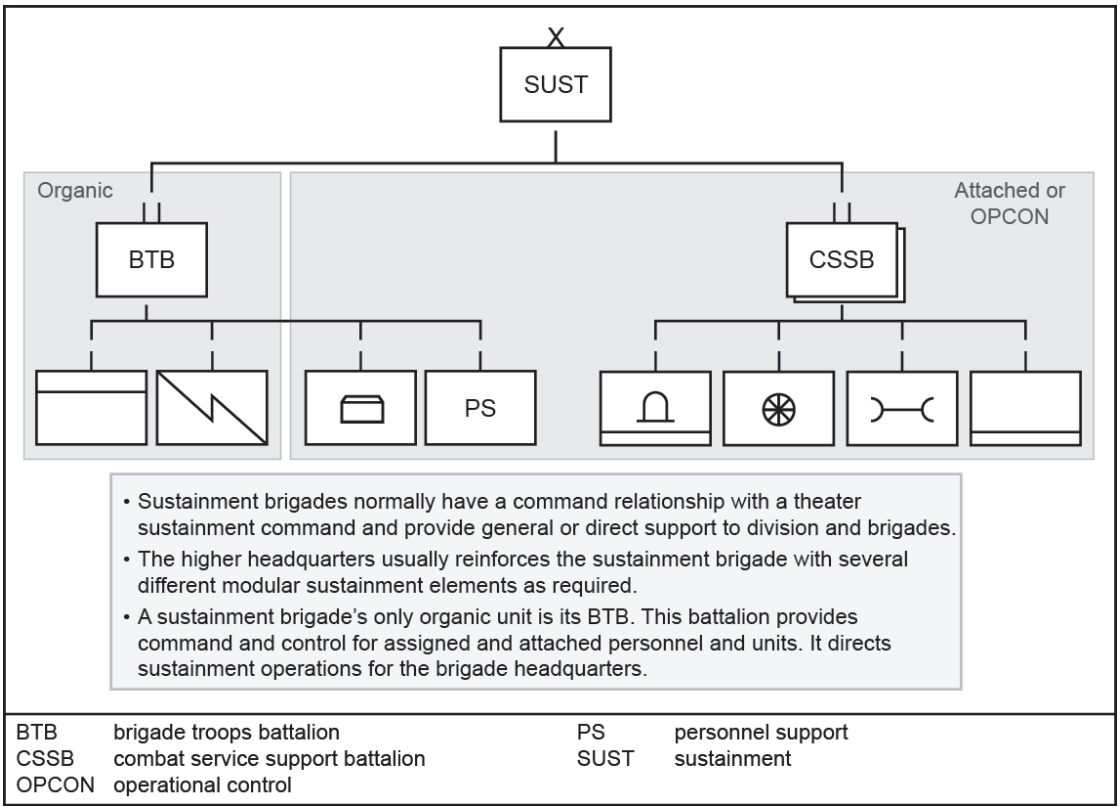

Figure 6-7. Sustainment brigade

SEPARATE UNITS AND OTHER FORCES

6-34. Other units and forces contribute to the division role. These consist of a civil affairs battalion, a tactical military information support company, an EOD battalion or company, CBRN units, SOF, a military history detachment, and a mobile public affairs detachment.

Civil Affairs Battalion

6-35. Normally, a civil affairs battalion is attached to each division if sufficient civil affairs units are available. This support can come from either the Regular Army or the Reserve Component civil affairs battalions with the conventional force support mission. The composition of both civil affairs battalions is similar in the areas of a civil affairs planning team, CMOC, civil liaison team, and the civil information management cell. Unlike the more robust functional specialty structure or the Reserve Component civil affairs battalion, the special function team within the Regular Army battalion provides limited capability for intermediate-level assessment of threats to the civil component of an operational environment at the

provincial to local levels. The organization also allows civil affairs battalion to assess mission planning requirements, and to develop, coordinate, and synchronize resources for stability tasks. Missions that require more in-depth functional specialty support than the allocated civil affairs battalion can be accomplished through reachback to the civil affairs regiment. Reserve Component functional specialty cells contain subject matter experts in the areas of rule of law, economic stability, infrastructure, governance, public health and welfare, and public education and information.

6-36. The civil affairs battalion's CMOC is capable of managing, coordinating, and synchronizing civil affairs operations and civil-military operations within a division's area of operations. The CMOC provides a place where stakeholders can coordinate their activities as unified action partners. This center serves as the primary coordination interface for U.S. forces and indigenous populations and institutions, humanitarian organizations, intergovernmental organizations, nongovernmental organizations, multinational forces, host-nation government agencies, and other civilian agencies of the U.S. Government. The division G-9 provides direction and oversight to the CMOC through the CMOC officer in charge (usually the civil affairs battalion commander). The CMOC is tailored to the specific tasks associated with the mission based on a METT-TC analysis. Protection is a key concern when considering where to locate the CMOC. Placing the CMOC within the division's consolidated command post can enhance security for the CMOC, but this may also interfere with its ability to interact with nongovernmental organizations and other stakeholders. The division G-9 should carefully consider the location and security of the CMOC. The CMOC should be accessible to government and nongovernment agencies. It should be secure from irregular threats, but the presence of sizeable U.S. security may create an unfavorable impression with host-nation authorities.

6-37. As part of the civil affairs battalion, the civil affairs planning team is skilled in the military decisionmaking process and the operations planning process. The civil affairs planning team can assist the G-9 and division staff with planning and integrating civil affairs operations, stability tasks, and civil-military operations into the supported commander's overall plan. The G-9 synchronizes all civil affairs operations throughout the division area of operations. (For more on the civil affairs battalion and support to the division, see FM 3-57.)

Tactical Military Information Support Company

6-38. The division normally receives a tactical military information support company to support the maneuver commanders. It enables the maneuver commander to influence, either directly or indirectly, foreign populations to achieve behavior changes consistent with the maneuver commander's stated objectives. The tactical military information support company develops messages and actions in a series to address operational requirements of the maneuver unit. Series development consists of developing both product concepts and actions for a psychological effect. MISO units develop messages and talking points for Soldiers and leaders conducting senior leader engagement. The company command section augments the maneuver unit staff to provide MISO, senior leader engagement, and military deception planning assistance. The tactical military information support company commander works with the supported unit staff to integrate attached MISO forces. The company requires sustainment support from the HHB as its organization does not include sustainment assets.

Explosive Ordnance Disposal Units

6-39. An EOD battalion may support the division. An EOD company attached to the battalion may support either a BCT or the MEB.

Explosive Ordnance Disposal Battalion

6-40. The EOD battalion is a functional headquarters for EOD operations. The EOD battalion is responsible for staff planning and staff control of all counter-improvised explosive device (known as IED) assets within a division area of operations. The EOD battalion is capable of conducting and supervising EOD operations for two to seven EOD companies. The EOD battalion reports directly to the EOD group. The EOD battalion may be attached or OPCON to a theater army, corps, division, JTF, or combined JTF for a specific operation. (See ATP 4-32.)

Explosive Ordnance Disposal Company

6-41. The EOD company commands between one and five EOD platoons and provides company-level planning and support based on the level of employment. The EOD company normally provides direct support or general support to a BCT or MEB. The EOD company may also be placed under the OPCON or TACON of Army special forces units. (See ATP 4-32.)

Chemical, Biological, Radiological, and Nuclear Units

6-42. The Army chemical corps maintains two CBRN echelons: battalion and brigade. These two headquarters provide intermediate CBRN capabilities for divisions or at echelons above division. These organizations provide the supported command with the capacity to mass the effects and capabilities of CBRN units at decisive locations or times on the battlefield. The CBRN battalion is a stand-alone headquarters that commands up to six CBRN companies or equivalent CBRN elements. The battalion is typically employed in support of a division or at echelons above division. Its command and support relationship may include attached, OPCON, or direct support, depending on the factors of METT-TC. It may also be task-organized to a CBRN brigade, an MEB, or as an independent CBRN battalion to a CBRNE operational headquarters.

6-43. Army CBRN units that make up a CBRN battalion or brigade offer a range of capabilities to division operations. They can accomplish missions as units, teams, or individuals. Diverse landpower requirements often require a mix of different units—decontamination, CBRN reconnaissance, and bio-detection. CBRN units provide the capability to accomplish or support WMD counterforce missions (interdiction, offensive operations, and elimination) and CBRN consequence management, while maintaining capabilities to conduct CBRN passive defense operations that are required for the Army to prevent, shape, and win. The CBRN force organization within a division depends greatly on the threat. Based on the mission variables prevailing in the AOR, the commander tailors available CBRN forces for the specific situation. The senior chemical unit commander, staff, and functional units assigned normally conduct CBRN operations to provide support across the joint force in addition to Army units. (See FM 3-11.)

Special Operations Forces (Other than Civil Affairs and MISO)

6-44. The division may have SOF under its control or operating in its area of operations. When this is the case, the division may receive a special forces liaison element to synchronize SOF activities with division operations. This element should locate at the appropriate command post.

Military History Detachment

6-45. A military history detachment may support the division headquarters battalion in preserving historical documentation and artifacts. Individuals in this detachment may attend key briefings and meetings and interview key personnel to gather firsthand observations, facts, and impressions. The personnel within the detachment keep a daily journal of their personal observations and key events. They also assist the division information management element in packaging and forwarding collected information to appropriate agencies. The information collected by this detachment assists the division complete after action reviews and document the division's lessons learned.

Mobile Public Affairs Detachment

6-46. A mobile public affairs detachment provides support to units in support of Army, combined, joint, or multinational operations. A mobile public affairs detachment is assigned, attached, or OPCON to echelons at division and above. It may support the ASCC, TSC, or corps public affairs staff sections. It also may augment a press camp headquarters in operating a media operations center or deploy independently in support of other Services and operations. A mobile public affairs detachment has personnel and equipment to—

- Assist and advise commanders on public affairs programs and missions.
- Plan, prepare, and execute information strategies.

- Facilitate, assess, and monitor media activity.
- Acquire and process public affairs digital video, audio, and imagery.

THE DIVISION HEADQUARTERS

6-47. The division headquarters is organized and equipped for sustained combat operations. By design, it resembles the corps headquarters, but it has different manning (chiefly standards of grade) and equipment. The headquarters consists of a main command post, tactical command post (which may be reorganized into an EECP), mobile command group, and HHB. Plans and operations across these staff sections, cells, command posts, and echelons are facilitated by a network and suite of mission command systems to enhance collaboration and synchronization.

MAIN COMMAND POST

6-48. The main command post is the primary command post of the division. It controls division operations. The division main command post is responsible for the sustained conduct of current operations, future planning, analysis for current and future operations, sustainment coordination, and other staff functions. The division staff at the main command post operates under the general supervision of the division chief of staff. The main command post can accomplish its mission command warfighting functions without the tactical command post. It is a complete command post capable of autonomous operation. Staff responsibilities include:

- Controlling all division operations.
- Serving as the primary location for plans, analysis, and sustainment coordination.
- Monitoring and assessing operations for impact on future operations.
- Planning operations.
- Producing operation and contingency plans.
- Integrating intelligence operations into both current and future operations.
- Producing all-source intelligence products.
- Producing terrain products.
- Conducting information management and knowledge management.
- Coordinating and managing force structure to include request for forces and equipment.
- Synchronizing the division's targeting process.
- Controlling division-assigned airspace with the assigned ASOC. (See paragraph 6-52.)
- Coordinating offensive, defensive, and stability (or DSCA in the homeland) operations.
- Providing DSCA as part of a JTF-state (for National Guard Divisions), a USPACOM JTF, or a USNORTHCOM JTF. (See ADRP 3-28.)
- Preparing and maintaining division running estimates, plans, and orders to support future operations.
- Planning and synchronizing division sustaining operations.
- Preparing all reports required by higher headquarters.

6-49. Division assigned airspace is normally that airspace assigned by the airspace control authority within the boundaries of the division's area of operations up to the coordinating altitude. The airspace assigned may not be over the entire area of operations, but could be from the rear boundary to the FSCL between the lateral boundaries. The airspace control authority may not assign the division the airspace over the entire division area of operations, depending on the size of the area. The terrain or just the volume of air over the entire area of operations, if it is very large, can exceed the ASOCs ability to control.

6-50. Figure 6-8 on page 6-14 illustrates the organization of the main command post. The main command post consists of a command group, functional cells, and integrating cells. There are five functional cells—intelligence, movement and maneuver, fires, protection, and sustainment. The movement and maneuver functional cell forms three integrating cells—current operations integrating cell, future operations cell, and plans cell—to which other staff cells attach subject matter experts. The cells are scalable to accommodate

joint staff augmentation when required, such as when the division becomes a joint force land component or JTF headquarters.

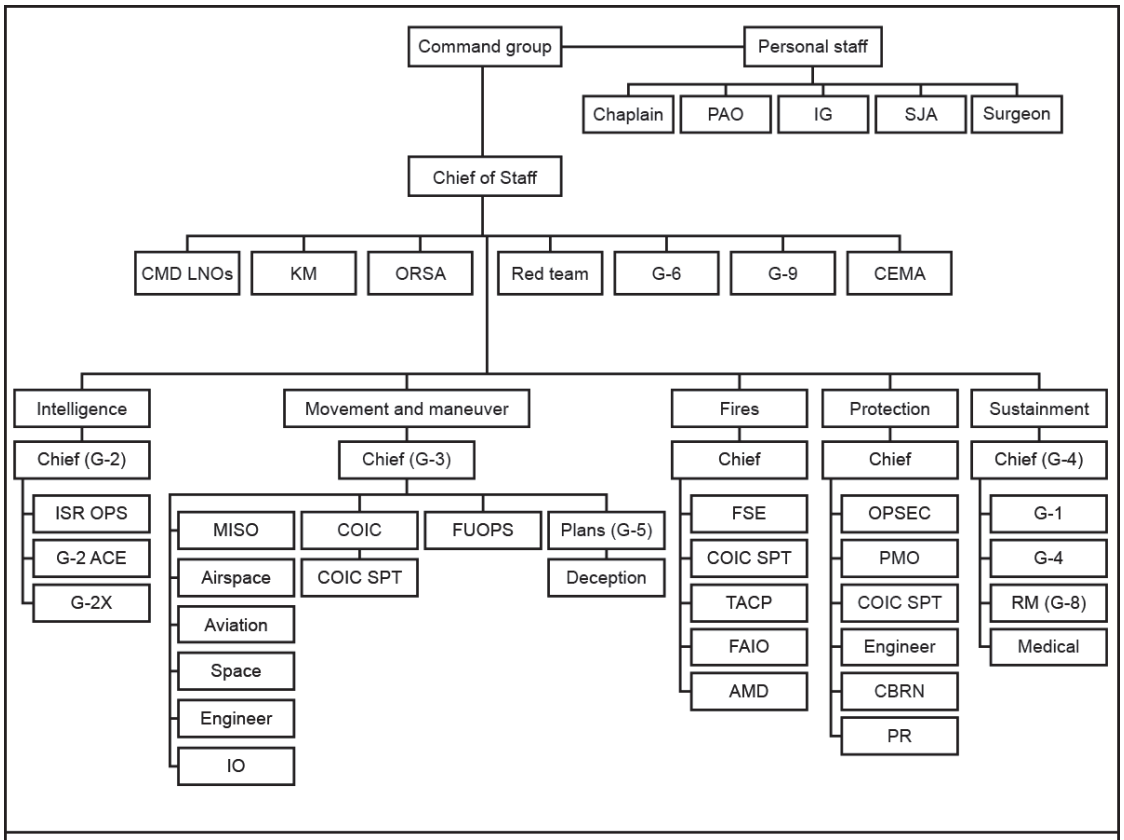

ACE	analysis and control element	G-9	assistant chief of staff, civil affairs operations
AMD	air and missile defense	IG	inspector general
CBRN	chemical, biological, radiological, and nuclear	IO	information operations
CEMA	cyber electromagnetic activities	ISR	intelligence, surveillance, and reconnaissance
CMD	command	KM	knowledge management
COIC	current operations integrating cell	LNO	liaison officer
FAIO	field artillery intelligence officer	MISO	military information support operations
FSE	fire support element	OPS	operations
FUOPS	future operations	OPSEC	operations security
G-1	assistant chief of staff, personnel	ORSA	operations research and systems analysis
G-2	assistant chief of staff, intelligence	PAO	public affairs officer
G-2X	assistant chief of staff, human intelligence	PMO	provost marshal office
G-3	assistant chief of staff, operations	PR	personnel recovery
G-4	assistant chief of staff, logistics	RM	resource management
G-5	assistant chief of staff, plans	SJA	staff judge advocate
G-6	assistant chief of staff, signal	SPT	support
G-8	assistant chief of staff, financial management	TACP	tactical air control party

Figure 6-8. Main command post of a division

6-51. The integrating cells operate across the warfighting functions. The three integrating cells consist of individuals and elements from within the functional cells and focus on integrating plans and operations across division structure. The three integrating cells are the current operations integrating cell, the future operations cell, and the plans cell. The integrating cells divide responsibilities for planning and execution based on the complexity of the plan, the planning horizons for planning and execution, or another criterion selected by the commander. As an alternative, a commander could assign a specific plan to an individual staff member or group of staff members to develop from origin to execution. Managing the handoff of a plan from G-5 plans to G-3 future operations to G-3 current operations is the responsibility of the G-3.

6-52. The USAF provides an air support operations squadron as well as the ASOC to the division to control close air support and other air support in the division's airspace area of operations. The ASOC and TACP personnel work within the division fires cell and airspace element. Together with the Army personnel, they form a JAGIC. This center integrates and coordinates fires and air operations over and within the division commander's area of operations. A JAGIC is located within the current operations integrating cell and works directly for the current operations chief. Chapter 7 discusses tactical considerations concerning USAF support. The JAGIC—

- Executes the ATO as directed by the joint or multinational force air component commander.
- Provides procedural control of close air support aircraft operating in the area of operations.
- Establishes, maintains, and operates the air communications architecture.
- Provides decentralized execution of immediate air support and obtains clearance of fires from the appropriate fires echelon.
- Integrates, coordinates, directs, and controls other air component missions.
- Coordinates air missions that fly within the division-assigned airspace but do not directly support the ground component and other supporting arms activities (such as Army Tactical Missile System missions) to de-conflict with ground force maneuver and fires, in addition to receiving target and threat updates.
- Assists with dynamic targeting and friendly force location information.
- Advises the division commander on close air support employment, target nominations for those air interdiction and suppression of enemy air defenses (known as SEAD) missions that support the ground force, airborne surveillance, and airlift that directly supports the division.
- Integrates division fires with other complementary and reinforcing functions for achieving air-ground integration.

6-53. Some staff elements work directly for the chief of staff, such as the G-6, while other elements become part of the integrating and functional cells. This includes most of the special staff. The commander determines which elements of the personal staff, if any, will work in an integrating or functional cell.

TACTICAL COMMAND POST

6-54. The division employs the tactical command post to control specific operations. The tactical command post maintains continuous communication with subordinates, higher headquarters, the other command posts, and supporting joint assets. It is also capable of controlling division operations for a limited time when the main command post is displacing or otherwise not available. However, the tactical command, if separated from the main command post, requires augmentation from a main command post to control operations for extended operations. The tactical command post contains a robust network capability with many of the same mission command systems as the main command post. The tactical command post can maintain situational awareness and connectivity with higher headquarters and subordinate units when the main command post is displacing or not available. (See figure 6-9 on page 6-16.)

6-55. One of the two assistant division commanders controls operations from the tactical command post. The G-3 staff section is responsible for the operation of the tactical command post. The division commander may command the division from the deployed mobile command group, the tactical command post, or the main command post, as dictated by the mission variables of METT-TC.

6-56. The tactical command post extends the division headquarters' capabilities to specific actions within a larger operation. The division commander may use the tactical command post to control any operation involving two brigades but not the rest of the division. For example, the tactical command post may control a passage of lines between BCTs or the relief in place of a BCT by a MEB. The tactical command post may control a BCT and supporting forces in a covering force mission while the main command post controls defensive preparations in the main battle area. The tactical command post also controls forces committed to a specified operation, such as brigade-sized air assaults, river crossings, deliberate breaching operations, or a passage of lines involving multiple subordinate units or a large-scale stability operation. The tactical command post may form the headquarters of a task force with subordinate units task-organized under its control, such as establishing security. However, it could also control particularly complex sustaining operations such as RSOI or reconstitution involving multiple subordinate brigades.

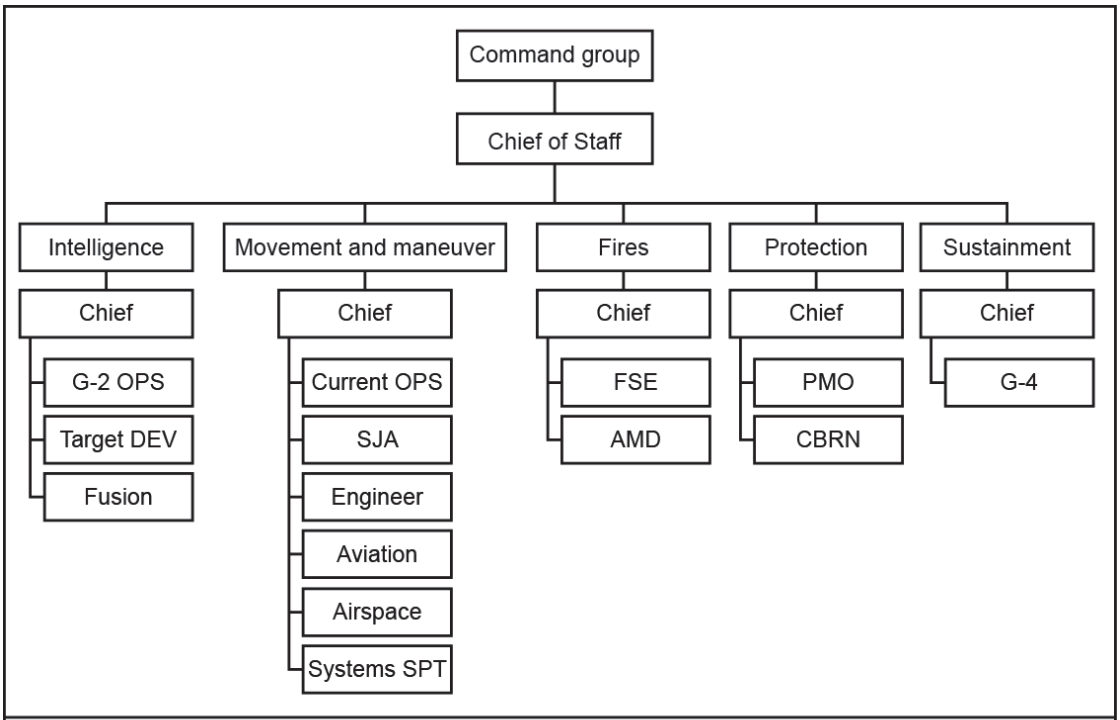

AMD	air and missile defense	G-4	assistant chief of staff, logistics
CBRN	chemical, biological, radiological, and nuclear	OPS	operations
DEV	development	PMO	provost marshal office
FSE	fire support element	SJA	staff judge advocate
G-2	assistant chief of staff, intelligence	SPT	support

Figure 6-9. Division tactical command post

6-57. When the division employs the tactical command post to control the execution of the division's overall operations, such as when the main command post is deploying into or displacing within the area of operations, then the tactical command post maintains the common operational picture for the division according to the command information management plan. In this case, the tactical command post performs duties that may include the following:

- Control units and activities conducting the decisive operation or shaping operations.
- Maintain the current operations estimate.
- Maintain and disseminate the common operational picture throughout the division.
- Populate the common operational picture to meet the commander's requirements.
- Monitor division-level sustaining operations.
- Prepare a forward location for issuing orders and conducting rehearsals.
- Prepare a forward short-term planning facility when the main command post displaces.
- Provide the majority of the personnel and equipment to form an assault or EECP.
- Provide personnel with specific skills sets to support the mobile command group.

6-58. The tactical command post is completely mobile and can displace all its personnel and equipment with organic transportation. Factors that influence the movement of the tactical command post include the flow of operations, the threat of enemy action, and the desires of the commander. Elimination of the dependency on line-of-sight communications systems, with their inherent range limitations, allows the tactical command post to remain stationary longer and maintain control over units conducting operations over extended distances. However, the tactical command post should remain close enough to subordinate brigades for the staff to be cognizant of an operational environment in which the brigades are operating. Some potential roles for the tactical command post include the following:

- The tactical command post can act as the headquarters of a multi-brigade task force organized from divisional units for a mission. During the conduct of widespread offensive actions, the commander may designate the tactical command post to control the operations of forces eliminating bypassed enemy forces within small cities along a line of operations while the main command post controls the decisive operation.
- The tactical command post may control decisive, shaping, and sustaining operations. The division commander may distribute control of decisive, shaping, and sustaining operations between command posts in complex operations. Whichever command post is controlling the decisive operation also controls the shaping operations that are setting conditions. This ensures the controlling headquarters has visibility over both and can effectively synchronize the entire operation.
- In protracted operations, the commander may combine the tactical command post and the main command post into a single co-located command post. This single command post increases the capacity to control particularly complex tasks that may be performed in the area of operations.
- The tactical command post can employ forces and deploy forces simultaneously with the main command post. The main command post can control the deployment of forces into the area of operations while the tactical command post is in the area of operations controlling initial operations.

EARLY-ENTRY COMMAND POST

6-59. The EECP is an ad hoc organization comprised of equipment and personnel from the staff of the tactical command post and the main command post. The tactical command post provides the base for the EECP. The division adds or subtracts personnel based on mission requirements. The EECP includes a mix of current operations personnel, planners, and logisticians able to coordinate the reception of the division and plan its initial operations.

6-60. When the division headquarters alerts for deployment, the tactical command post moves to a high-readiness posture, configuring equipment and personnel into a command post package to fit constrained lift with the other equipment and personnel prepared to follow. A division deployment might consist of a consolidated main command post (main and tactical command posts) at home station that provides control of pre-deployment preparation, mission rehearsals, collaborative planning, training with higher headquarters, and initial phases of unit deployment. The EECP deploys early in the deployment sequence. While the EECP is deploying, the division main command post monitors deployment of subordinate units and coordinates with the gaining headquarters. Once the EECP is fully functional within the joint operations area, the commander determines the best time to deploy the remainder of the main command post. The commander determines the initial locations, sequence, and timing of deployment and displacement for all command posts. The commander deploys along with elements of the command group forward once a fully functional command post becomes operational in the division area of operations.

MOBILE COMMAND GROUP

6-61. The purpose of a mobile command group is to allow the commander to exercise personal leadership at a critical time and place during the conduct of operations. It allows the commander to displace from a command post while maintaining continuous access to the common operational picture. Mobile command groups allow commanders to—

- Provide personal leadership, intent, and guidance at the critical place.
- Make a personal assessment of the situation.
- Maintain situational understanding while moving around the area of operations by allowing them to have continuous access to updated information.
- Travel with key staff officers necessary to provide information relevant to the current operation.

6-62. The mobile command group allows the division commander to move to the point of decision. The division commander moves to a location to best assess the risks and make adjustment decisions by seeing, hearing, and understanding what is occurring. What division commanders learn and see helps them mentally visualize adjustments needed in current and future operations while moving about the area of

operations and interact with their subordinate commanders and different staffs. Thus the mobile command group allows the division commander to command from anywhere in the area of operations and not become tied to the tactical command post or main command post.

6-63. The mobile command group has both a ground and an aerial component. The mobile command group's ground component consists of specially configured vehicles, each with multifunctional mission command systems that provide the commander with networked communications while moving. The air component of the mobile command group consists of helicopters (each equipped with a mission command system) assigned to a combat aviation brigade and provided when required. Data links for connectivity to many ground and airborne platforms provide the commander with the flexibility to operate in all environments without additional equipment.

6-64. The mobile command group requires a security force. The division tasks a subordinate unit to provide a security force to the entire HHB that secures the mobile command group and division command posts.

6-65. The division commander selects the individuals who staff the mobile command group. These personnel are normally functional representatives of those staff sections control combat operations (such as maneuver, fires, and intelligence) in addition to the air liaison officer, and when needed, a joint terminal attack controller. The mission and staff available, however, dictate its makeup.

THE HEADQUARTERS AND HEADQUARTERS BATTALION

6-66. The division HHB provides all administrative support, life support, communications, and transportation for the division's two command posts and the mobile command group. The HHB has a complete battalion staff. The HHB consist of four companies with distinct missions: the headquarters support company, the operations company, the intelligence and sustainment company, and a signal (network support) company. The division headquarters also requires a security company that is not currently resourced. The division band (if present) is attached to the HHB. (See figure 6-10.)

6-67. The organization of the division HHB is quite similar to that of the corps headquarters battalion. The headquarters support company includes life support and maintenance sections for the division main and tactical command posts. These can be task-organized to support the configuration of the division headquarters. The operations company provides administrative support to the movement and maneuver, fires, and protection sections of the staff. The intelligence and sustainment company provides administrative support to the intelligence and sustainment sections. The signal company task-organizes to support the main and tactical command posts, in whatever configuration the division commander directs. It connects the division headquarters into the Army global network enterprise, and through it, into the DOD information networks. The signal company ties into the network through a supporting expeditionary signal battalion from the theater tactical signal brigade.

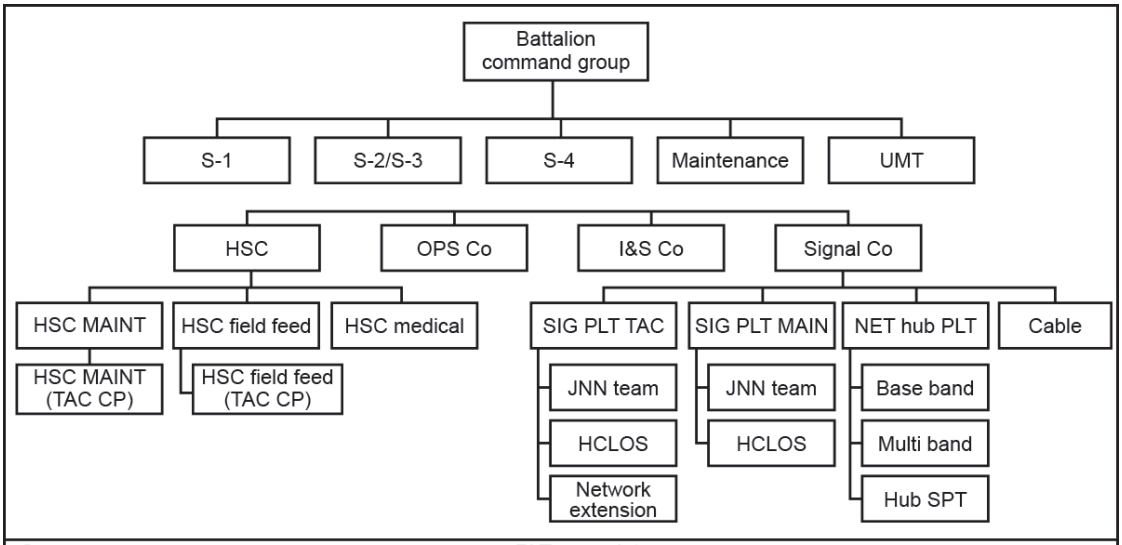

Co	company	PLT	platoon
CP	command post	S-1	battalion manpower and personnel staff officer
HCLOS	high-capacity line of sight	S-2	battalion intelligence staff officer
HSC	headquarters support company	S-3	battalion operations staff officer
I&S	intelligence and support	S-4	battalion logistics staff officer
JNN	joint network node	SIG	signal
MAINT	maintenance	SPT	support
NET	network	TAC	tactical
OPS	operations	UMT	unit ministry team

Figure 6-10. Division headquarters and headquarters battalion

This page intentionally left blank.

Chapter 7
Division Operations

THE TACTICAL ENVIRONMENT

7-1. The Army division headquarters deploys and commands multiple brigades across the range of military operations. It operates in any geographic region. The division synchronizes brigade maneuver with joint and Army capabilities to conduct battles and engagements. Its higher headquarters normally is an Army corps, which assigns the division its tactical tasks and allocates joint support. The Army corps assigns the division its tactical tasks and provides capabilities and resources to the division to achieve specified objectives. The corps commander distributes air support made available by the JFACC. The corps commander's distribution decision affects the priority of use for close air support and the sorties available to subordinate divisions. The division may operate under the commander of a Marine expeditionary force or a multinational corps headquarters, supported by the theater army.

7-2. The division operates in tactical environments spanning the range of military operations. In its most likely missions, the division conducts simultaneous offensive, defensive, and stability operations under the command of a joint force land component as part of joint force. Likely conditions in the area of operations could include the following:

- Hybrid threats and irregular warfare.
- Host-nation authorities under duress due to conflict and civil instability.
- Dense population areas within which threat forces may attempt to operate.
- Damaged, deteriorating, and inadequate infrastructure.

7-3. In less likely but more dangerous environments, the division conducts battles and engagements against large, well-trained, and heavily armed conventional forces operating with unconventional forces. Often the division is supported by CBRN and cyber electromagnetic capabilities. Division units conduct stability tasks incident to combat operations with host-nation authorities.

7-4. In either case, the division commander translates the higher headquarters' broad operational objectives into tactical tasks assigned to subordinate BCTs and supporting brigades. Exercising mission command at this echelon requires synchronization of joint and Army capabilities with brigade maneuver. The division commander focuses on the current operation and potential branches to the current operation while visualizing the concept of operations for next tactical phase (sequels). The division commander allocates and re-allocates capabilities under the division's control between brigades constantly. Planning horizons for the division are shorter than for the corps, cycling, as they must, within the longer campaign horizons of the corps. The division commander conveys requirements for joint shaping through the corps commander while limiting most division shaping efforts to those things affecting the immediate operation.

7-5. The division commander employs BCTs in combined arms operations, integrated with aviation, fires, and intelligence. Maneuvering the BCTs into position to destroy enemy forces through close combat is the principal means by which the division accomplishes offensive and defensive missions. Joint capabilities coordinated through the corps are enablers for the division, allowing the division commander to economize or weight subordinate brigades. Where the corps commander develops operations based upon operational reach, the division commander calculates mutual support, supporting range, and supporting distance. The division commander also carefully monitors the endurance of subordinate brigades in terms of days and hours until their organic sustainment units require replenishment. The tempo of operations becomes as important as the distance between the division's brigades and the supporting sustainment elements; these factors determine the relative endurance of the division.

7-6. The division commander assesses stability tasks in terms of how they affect local conditions, which might be quite different from another division's area. Whereas the joint force land component engages with

the U.S. country team, national authorities, and regional host-nation authorities, the division commander most often works with provincial and local officials. The division commander frequently engages with other agencies on the ground. The division commander and the brigade commanders often meet and build relationships with other U.S. government agencies.

DEPLOYMENT OF A DIVISION

7-7. As soon as possible in the deployment sequence, the division deploys an EECP followed by the remainder of the tactical command post. The earlier that the division can deploy a functioning command post, the earlier the division commander can move to the area of operations. This is important because some of the brigades joining the division may have never before worked with that commander. The division commander deploys as soon as the division has a functioning command post. The division commander and staff collaborate with the deploying brigades even before the brigades complete RSOI.

7-8. The commander also evaluates the situation and determines from where the main command post will deploy and what the tactical command post and mobile command group will need to do based on actual conditions in the area of operations.

TASK-ORGANIZING THE DIVISION

7-9. Exercising mission command at the division level depends on commanders completely understanding of the chain of command, support responsibilities, and geographic responsibilities. The division order specifies command and support relationships within the division's task organization. The commander assigns subordinate areas of operations together with the minimum necessary control measures for that phase of operations. The order then clearly states the mission, commander's intent, and concept of operations. Regardless of the nature of the mission, the G-3 transmits any changes to every subordinate unit in the division and receives a formal acknowledgement from each unit. The current operations integrating cell tracks each transmission and receipt.

7-10. Division commanders designate command and support relationships to ensure subordinate and supporting commanders understand their roles in the operation and support the division commander's intent. Table 7-1 on pages 7-4 and 7-5 highlights command and support relationships used by the division. Command and support relationships carry with them varying responsibilities to the subordinate unit by the parent and the gaining units. (See ADRP 5-0.) Commanders consider four related guidelines organizing the division for decisive action:

- The BCTs are organized, trained, and equipped to fight as a combined arms force. The division commander normally reinforces the BCT with capabilities from the multifunctional support brigades and adjusts the tasks assigned to the BCT accordingly. The division may temporarily detach one of the BCT's organic battalions. For example, the division may place a Stryker battalion under the OPCON of a MEB as a tactical combat force.
- Multifunctional support brigades are more effective when they operate as they organized and trained. The division commander maintains the tailored organization of multifunctional support brigades until tactical circumstances require temporary reallocation of subunits.
- The division operates more effectively when the commander adjusts tasks to subordinate units rather than constantly adjusting the division's task organization.
- The commander assesses the span of command for each brigade and does not exceed it.

7-11. When the mission assigned to a particular BCT or the combat aviation brigade requires more combat power than what is organic to that unit, then the division commander may decrease the size the subordinate brigade area of operations. Resizing the area of operations conforms the size of the division area of operations more closely to its area of influence. Conversely, the commander adds combat power to the BCT or combat aviation brigade by placing a battalion with support from another BCT, a multifunctional support brigade, or a functional brigade temporarily under its command. Considerations concerning other warfighting functions, especially for sustainment, may preclude multiple reorganizations of attached BCT and combat aviation brigade internal structures.

7-12. Division commanders should avoid imposing an excessive span of control on subordinate commanders. Span of control refers to the number of subordinate units under a single commander. Allocating subordinates more units typically gives subordinates greater flexibility and increases the number of tactical options available. However, subordinate commanders should not be given more units than they can effectively command. The addition of multinational units to a subordinate U.S. brigade's task organization can reduce its span of control, even though the number of units appears manageable. Additional units can slow the operations process in that brigade, particularly as the tactical situation becomes more fluid.

7-13. An effective division task organization—

- Facilitates the division commander's intent and concept of operations.
- Retains flexibility within the concept of operations.
- Weights the division's decisive operation.
- Adapts to conditions imposed by the mission variables of METT-TC.
- Maintains or creates effective combined arms teams.
- Provides mutual support among brigades.
- Ensures flexibility to meet unforeseen events and support future operations.
- Allocates resources with minimum restrictions on their employment.
- Ensures unity of command and synchronization of effort through proper use of command and support relationships.
- Offsets limitations and maximizes the potential of all available forces.
- Exploits enemy vulnerabilities.

Table 7-1. Command and support relationships for the division

Relationship	*Use*	*Task organization*	*Movement and employment*	*Administrative control (ADCON)*
Attached	Attached applies to a long-term transfer. The command relationship should last for the duration of the campaign. Normally used when the subordinate unit augments an attached brigade. BCTs and multifunctional support brigades (less sustainment) normally are attached.	The division task-organizes as required, using any command or support relationship.	The division can position the unit anywhere in the AO or delegate to a subordinate commander through task organization.	ADCON transfers to the gaining HQ. The division assumes ADCON of the unit, including logistics, medical, and administration.
Operational control (OPCON)	OPCON applies to a temporary transfer that allows the gaining commander maximum flexibility to employ the subordinate unit. Battalions transferred from corps-controlled units are normally OPCON.	The division can place the entire unit or parts under OPCON, TACON, or in support of another unit. The division may not attach the unit to another unit.	The division can position the unit anywhere in its AO, or delegate to a subordinate through task organization.	ADCON remains with the parent unit. Additional logistics and medical support provided on an area basis.
Tactical control (TACON)	TACON is a temporary command relationship used among the division, other Service, and multinational forces.	The division may not change the organization of the unit under TACON. However, the gaining commander may place the entire unit under TACON or in support of another unit.	The division may position the unit anywhere in the AO or delegate positioning authority to a subordinate commander by task organization.	ADCON remains with the parent unit headquarters. Additional logistics and medical support provided on an area basis.
Direct support (DS)	DS allows the division commander to set priorities and position the DS unit. DS allows a larger unit to support a smaller formation. The division may receive DS from ADA, engineer, and signal units.	The division can assign the DS unit any support relationship. This includes support relationships between subunits. Note that the parent unit commander may adjust the task organization of the DS unit as needed.	The division serves as the terrain manager for DS units operating within its AO. DS units positioned within the division AO is under the TACON of the division for protection and movement.	Parent unit retains ADCON. The ESC and medical brigade (support) supports DS units.

ADA air defense artillery
AO area of operations
BCT brigade combat team
ESC expeditionary sustainment command
HQ headquarters

Table 7-1. Command and support relationships for the division (continued)

Relationship	*Use*	*Task organization*	*Movement and employment*	*Administrative control (ADCON)*
Reinforcing (R)	R is used when two or more units are supporting one of the division's units. The reinforcing unit answers requests for additional capability from a DS unit. R is normally used by field artillery when one field artillery battalion is in DS to the field artillery battalion of a BCT, and a third field artillery battalion reinforces the DS battalion.	The force field artillery commander (normally a field artillery brigade) task-organizes the reinforcing unit. The supported unit (providing DS) may not specify further support alignments.	Based on coordination with the DS unit, the BCT or MEB owning the AO allocates terrain to the reinforcing unit.	Parent unit retains ADCON. Additional logistics and medical support provided on an area basis.
General support reinforcing (GSR)	GSR prioritizes additional capabilities among three supporting units. The first priority of a GSR unit is normally to the land component or corps. If a DS or its reinforcing unit requests help, the GSR unit gives priority to that support unit ahead of other requests, unless disapproved by the higher HQ.	The parent unit task-organizes the GSR unit primarily to provide support to the force as a whole. Supported units do not specify further support relationships.	Movement and positioning are controlled by the maneuver commander owning that AO. The higher HQ of the supporting unit coordinates for movement and terrain with the HQ owning that AO.	Parent unit retains ADCON. Additional logistics and medical support provided on an area basis.
General support (GS)	GS units provide support to the land component as a whole, normally on an area basis. The JFC specifies priorities of support. The division receives GS from the sustainment, medical, and signal brigades.	The parent unit task-organizes the GS unit.	Movement and positioning are controlled by the maneuver commander owning that AO.	Parent unit retains ADCON. Additional logistics and medical support provided on an area basis.

AO area of operations
BCT brigade combat team
HQ headquarters
JFC joint force commander
MEB maneuver enhancement brigade

7-14. Figure 7-1 on page 7-6 illustrates some of the command and support relationships used within the division. The division in the example originally deployed with three infantry BCTs, a field artillery brigade, a MEB, and a combat aviation brigade. The corps task-organized the division as shown. The corps detached one infantry BCT to another division and placed a Stryker brigade OPCON to the division. The corps placed a MEU under TACON of the division and attached a civil affairs battalion to the division. The corps placed a BTSB under OPCON to the division. The field artillery brigade commander, as the force field artillery commander, supports the 2d Infantry BCT with two battalions—one direct support and one reinforcing. The division commander organizes forces received from the corps as shown. The division commander opts to attach an additional chemical company to the MEB while placing a corps MP battalion under OPCON and an air defense artillery battalion (-) in direct support. The division commander places one of the air defense artillery batteries in direct support of the MEU. The sustainment, medical, and signal brigades are in general support and provide support on an area basis.

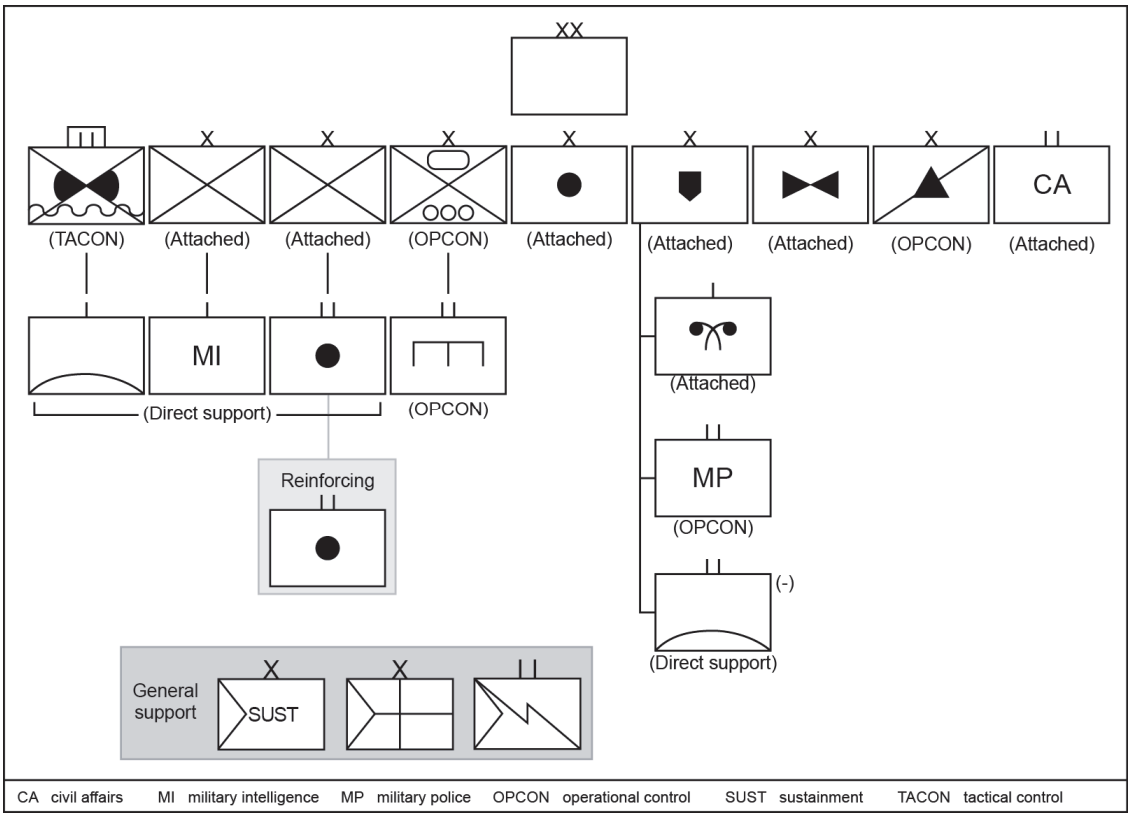

Figure 7-1. An example of a task-organized division

THE DIVISION AREA OF OPERATIONS

7-15. The higher commander (corps or land component) defines the division's area of operations. The division area of operations should be large enough for the commander to accomplish the mission and protect forces. The division commander employs assigned, attached, OPCON, and TACON units and positions supporting units within the division's assigned area of operations. Within the division area of operations, subordinate commanders synchronize their operations with the division's plan.

7-16. The division assigns areas of operations to the BCTs, multinational forces, and Marine Corps units. The MEB, if available, also receives an area of operations. The other types of multifunctional support brigades do not normally control an area of operations. The brigade controlling the area of operations is responsible for terrain management, information collection, civil affairs operations, air and ground movement control, clearance of fires, security, personnel recovery, and environmental considerations. Minimum-essential stability tasks are inherent to any commander assigned an area of operations.

7-17. The division, utilizing its ASOC, receives airspace control responsibilities for its area of operations from the airspace control authority. Division-controlled airspace typically extends from the rear boundary to the FSCL and between the lateral boundaries, up to the coordinating altitude.

7-18. The division typically assigns the MEB an area of operations that includes the support area. Other brigades such as the sustainment brigade, BTSB, field artillery brigade, and the combat aviation brigade may occupy terrain in the MEB's area of operations. The division may also position the main command post or tactical command post in the MEB's area. The division commander assesses the threat to the division's units and determines the distribution of protection capabilities in accordance with established priorities. The priority accounts for differences in vulnerability and mobility of different units to hostile means of detection and attack. At the division level, protection includes passive measures such as

dispersion and concealment. The division tasks the MEB to improve survivability of critical assets located in its area of operations that often includes sustainment, aviation, and the division main command post.

7-19. Division commanders use a mix of permissive and restrictive control measures to ensure subordinate commanders have the maximum flexibility to accomplish the mission. The concepts of area of interest and area of influence are applicable when assigning area of operations to brigades. (See ADRP 3-0.) The area of operations should coincide generally with the area of influence, and the higher headquarters (the joint force and corps commanders) should provide intelligence concerning the area of interest. The division assigns contiguous areas of operations, noncontiguous areas of operations, or a combination of adjacent and distinct areas of operations, as shown in figure 7-2. When assigning a noncontiguous area of operations, the division retains control of any areas in the division area of operations not assigned to a BCT or other units.

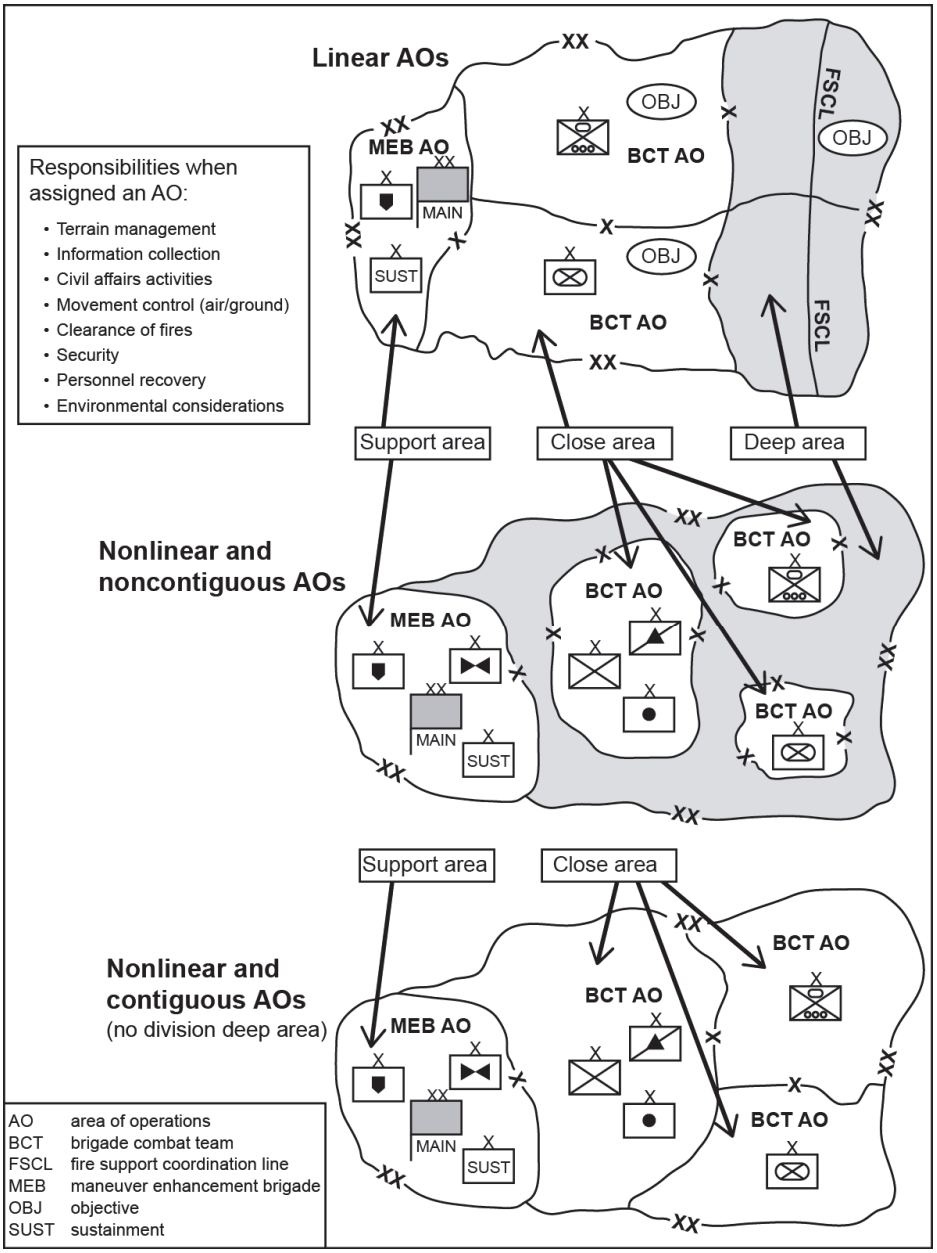

Figure 7-2. Example of division using contiguous and noncontiguous areas of operations

CONTIGUOUS AREAS OF OPERATION

7-20. In most operations, the division employs contiguous areas of operations. This allows the division commander to control the majority of the area of operations by using subordinate BCTs while avoiding gaps and seams in responsibility. The division assumes responsibility for the area of its area of operations beyond the brigade area of operations. Contiguous areas of operations may provide additional security for maneuver units as well as headquarters and the support area. Reasons that might favor using contiguous areas of operations include—

- A manageable size of the division area of operations in relation to the number of BCTs.
- Concentrated enemy forces.
- Limits to the gaps between BCTs.

NONCONTIGUOUS AREAS OF OPERATION

7-21. In special circumstances, the division may assign a BCT or another maneuver force such as a MEU a noncontiguous area of operations. The reasons for using a noncontiguous area vary but begin with geographical separation of important terrain from the remainder of the division areas of operations. The commander's decision deploys part of the force into a noncontiguous area of operations, regardless of command echelon, derived from analysis of the mission variables of METT-TC. In particular, the division commander evaluates the threat and ability of the enemy to mass combat power sufficient to threaten friendly forces in noncontiguous areas of operations. Second, the commander evaluates the enemy's ability to sever ground lines of communications between the noncontiguous areas of operations and the bulk of the division.

CONTIGUOUS AND NONCONTIGUOUS AREAS OF OPERATIONS COMBINED

7-22. Figure 7-3 illustrates a combination of contiguous and noncontiguous areas of operations. A division with three BCTs, a MEB, and a MEU conducts operations in this example of area of operations. Note that the Marine Corps area of operations is within the division's area of operations but not contiguous with the other brigades. In this case, the division assumes responsibility for that area between the different subordinate areas of operations. The division coordinates with the JFACC to establish a kill box (a fire control measure) within the division-controlled area. This allows the JFACC to attack targets freely within that part of the area of operations even though it lies within the division's boundaries. In some tactical situations, the JFACC may become the supported commander within the kill box, and the division may become the supporting commander within that area. The division may provide artillery for suppression of enemy air defenses and attack aviation to screen along the kill box boundaries.

7-23. The ESC and sustainment brigade normally provide logistics and administrative support to the units of the division on an area basis. The area of sustainment support does not necessarily equal the division's area of operations since the sustainment brigade supports corps, division, other Service, and some multinational units. The location and logistics demands of these units determine which units draw support from a particular CSSB, not the supported units command relationship. In the conduct of offensive and defensive operations, a sustainment brigade normally provides direct support to each committed division and area support to corps units on an area basis. The division commander exercises TACON over sustainment units located in the division's area of operations for protection and movement through the area of operations. The division staff coordinates continuously with the sustainment brigade staff supporting them. The BCT or MEB assigned an area of operations including a sustainment brigade or base locates its command post in proximity to the sustainment unit's command post to improve tactical planning and execution of protection and movement.

AIR FORCE SUPPORT

7-24. Tactical success at the division echelon emphasizes joint interdependence. USAF liaisons at each echelon of command integrate air support operations with the division's concept of operations, scheme of maneuver, and fires. The division depends on joint fires and capabilities provided by fixed-wing aircraft to include close air support, surveillance and reconnaissance, air interdiction, electronic warfare, and airlift missions.

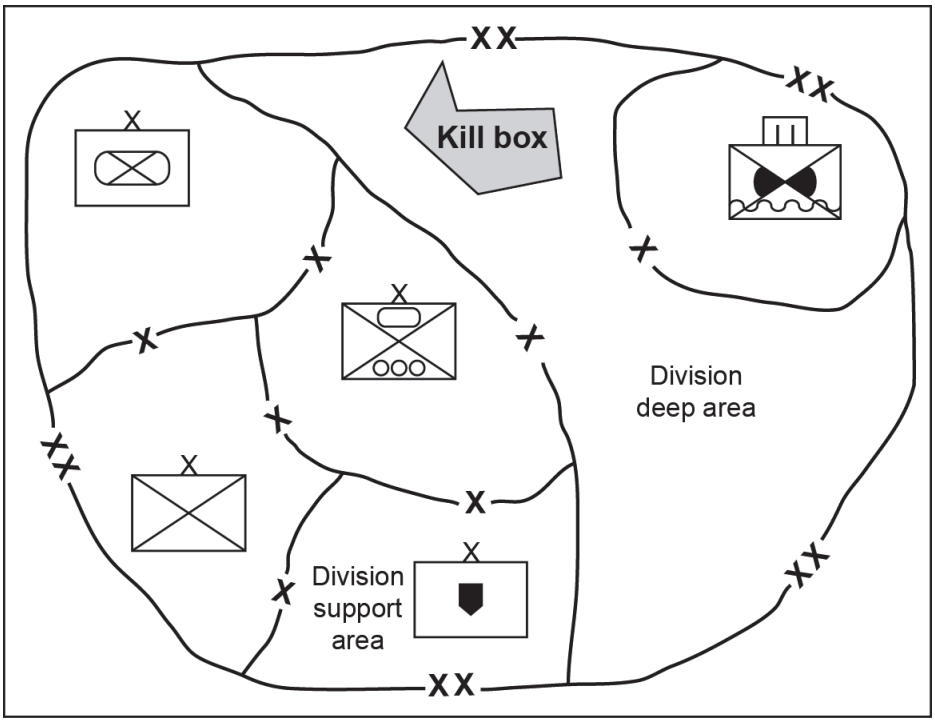

Figure 7-3. Division contiguous and noncontiguous area of operations

AIR SUPPORT OPERATIONS CENTER AT THE DIVISION

7-25. The air support operations squadron deploys to support each Army division with an ASOC and enough TACPs to support the division headquarters down to the maneuver battalions within the attached BCTs. When deployed, the ASOC and TACPs within the division are under the command of a single officer; they remain equipped and manned to perform distinct functions in support of BCTs.

7-26. The division commander considers three factors about the ASOC. First, the ASOC is a control center and derives synergy and efficiency from Air Force personnel working with division field artillery personnel in the JAGIC. The division commander should not split up the ASOC and JAGIC to co-locate it with multiple command posts, other than when the main command post is relocating. Second, the ASOC needs to be located in a relatively secure location. Due to the firepower the ASOC can potentially bring, its loss due to enemy action could have serious consequences for the ground forces. Third, the need for a relatively secure location has to be balanced by the ASOC's primary limitation—communications. To control airpower, it needs to be able to communicate with the aircraft, which in most cases remains restricted by ultrahigh frequency (known as UHF) or very high frequency (known as VHF) line-of-sight communications. The ASOC should maintain communications in all airspace short the FSCL. Depending upon terrain, radio relays, Joint Surveillance Target Attack Radar System (known as JSTARS), and airborne forward air controllers, the ASOC can extend these distances for a limited time.

7-27. Normally, the ASOC co-locates with the main command post within the current operations integrating cell as part of the JAGIC. However, the ASOC or JAGIC may displace to the tactical command post when the division shifts control of operations to the tactical command post or if the main command post is out of radio range of aircraft operating further forward. The ASOC commander recommends the best location for positioning the ASOC to the division commander based on the mission variables.

REQUESTS FOR AIR SUPPORT

7-28. The Army processes preplanned and immediate air support requests—JTARs—through the Army air-ground system. JTARs are how the Army approves or denies requests for external air support and

identifies air support requirements to the air component. The fires cell plans and processes JTARs, which then flow to higher headquarters for approval and prioritization. Once approved and prioritized, JTARs go to the air component. The JAGIC advises and assists the fires cell with completing valid JTARs.

7-29. The use of joint air assets requires the Army to submit its air support requests in time to meet the daily battle rhythm of the joint air tasking cycle. The division submits its preplanned JTARs through the corps (or other higher headquarters) to the supporting air component in sufficient time to meet the planning stages of the joint air tasking cycle. The joint air tasking cycle is time driven and designed to enable the JFACC to publish the ATO in time to enable tasked aircraft units to complete tactical mission planning and prepare for their missions. The BCD normally identifies the suspense to the corps and division headquarters, which in turn drives that portion of Army planning. When the system works as designed and the requests arrive on time at the JAOC, the supported ground forces commander knows whether or not there are dedicated air sorties available to support the ground force.

7-30. It is important for the division staff to send preplanned JTARs to the JAOC on time. Depending on the situation, the division fires cell can take initiative to submit preplanned JTARs for those subordinate units unable to meet the suspense. The division can submit JTARs for on-call air missions and area targets to get dedicated sorties on the ATO to support its BCTs. JTARs need to include sufficient information to task aircraft on the ATO but may require additional information before the flying unit can complete tactical mission planning. The preferred method for processing JTARs is the Advanced Field Artillery Tactical Data System. Units should use the Advanced Field Artillery Tactical Data System to process their JTARs in a prioritized air support list. The BCD has an Advanced Field Artillery Tactical Data System that nets with Air Force command and control systems at the JAOC. Digital submission enables the Army BCD to parse JTARs into the database for the air component to plan and resource.

7-31. Immediate JTARs are sent after publication of the ATO. The ASOC resources immediate JTARS (when given decentralized execution authorities) with suitable air assets that are already available on the ATO. Those JTARs that arrive too late to allow the BCD sufficient time to include them in the planning stages (target development, weaponeering, and allocation) of the joint air tasking cycle are treated as immediate JTARs. The ASOC and JTARs can use the joint air request net or Air Force air request net to send urgent requests as immediate JTARs. However, when time is available, JTARs should go through the Army air-ground system using the Advanced Field Artillery Tactical Data System.

WEATHER SUPPORT

7-32. Weather services provided by attached Air Force forces provide environmental information, including both space environment and atmospheric weather, to commanders for their objectives and plans at the strategic, operational, and tactical levels. Weather services gather, analyze, and provide meteorological data for mission planning and execution. Environmental information is integral to the decision process and timing for employing forces and planning and conducting air, ground, and space launch operations. Weather services also influence the selection of targets, routes, weapons systems, and delivery tactics.

MARINE CORPS UNITS

7-33. The division may control a MEU. The normal command relationship is TACON. The MEU consists of a reinforced Marine Corps rifle battalion and a composite air squadron with attached logistics support. A Marine Corps colonel commands the MEU. Although the MEU differs from an Army BCT in capability, the division employs it as a combined arms maneuver formation equivalent to the BCTs. The MEU has less artillery than a BCT, but the Marine Corps air squadron deploys fighter-bombers assault helicopters and attack helicopters. The MEU normally includes light armored units. The MEU's command and control capabilities equal those of a BCT; its airspace control is superior. The MEU normally deploys with 30–45 days of supplies. However, medical support away from the fleet is limited. The MEU's engineer and CBRN assets are normally limited. It has no missile defense capability once it maneuvers beyond the fleet's air and missile defense capability.

7-34. The MEU can conduct independent operations in a large area of operations. For offensive and defensive operations, the division reinforces the MEU with additional engineers and artillery, typically a

battalion of each. The MEU, if available, may be the unit of choice for an economy of force operation within a large area of operations. The MEU may also follow and support an armored or Stryker BCT. For stability intensive operations, the MEU normally requires support from Army civil affairs and MISO.

DECISIVE ACTION

7-35. The division conducts simultaneous offensive, defensive, and stability tasks throughout any campaign. The weight of effort allotted to each task varies by phase and within phases. The division's primary means of conducting decisive action are its BCTs operating in assigned area of operations, supported by various brigades. Subordinate brigades perform all three tasks, although one task normally requires the preponderance of their combat power. When deployed as part of a major operation or campaign, the division may command Marine Corps and multinational ground forces. When required, the division supports domestic authorities (using DSCA) in response to domestic disasters and during special events requiring large-scale military support.

OFFENSIVE TASKS

7-36. The division conducts offensive tasks to defeat, destroy, or neutralize an enemy. The preferred method of conducting offensive tasks is to find and disrupt the enemy at distance from friendly troop positions to set the conditions necessary for the division's decisive maneuver.

7-37. The division commander must leverage every available technological advantage to gain intelligence and to employ lethal fires, offensive cyberspace operations, and electronic attack as a precursor to a decisive operation. The division's BCTs can then precisely maneuver for the final, decisive blow.

7-38. Division commanders array their BCTs and supporting brigades so their subordinate commanders can employ their weapons systems with precision while degrading the enemy's ability to employ their weapons. This allows division commanders, assisted by their staffs, to assess the operation as it unfolds, conserve combat power, and minimize risk.

7-39. Division commanders seek to achieve decisive results by massing overwhelming combat power at the point of attack while avoiding the enemy's main strength. They employ their subordinate BCTs to disrupt the cohesiveness of enemy defenses and force the enemy off plan. Ideally, division commanders force the enemy to give up the advantage of fighting from prepared defensive positions by attacking the enemy's flanks or selecting a location or time of attack when the enemy is most vulnerable. Division commanders use the four primary offensive tasks.

Movement to Contact

7-40. Although the corps and division commanders may have an accurate idea of the overall situation and enemy disposition before they attack, their degree of situational understanding decreases as the situation becomes fluid and as large enemy and friendly forces maneuver. Division-sized movements to contact also may become necessary when the division fights against dispersed hybrid threats. The division's reconnaissance and surveillance systems are less effective when the enemy conceals himself in difficult terrain and urban areas. Under these conditions, the division largely depends on human intelligence resources, including ground reconnaissance, to find the enemy. See figure 7-4 on page 7-12.

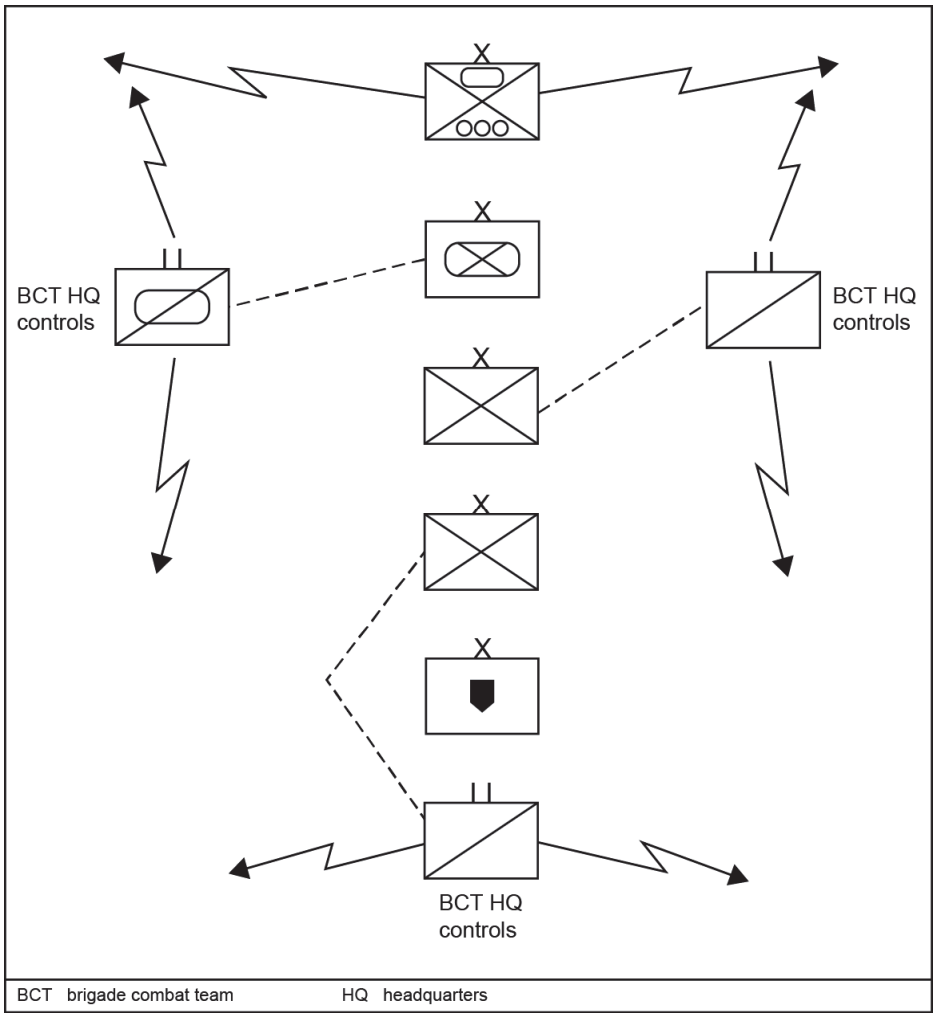

Figure 7-4. Example of division movement to contact

7-41. The characteristics of a movement to contact are centralized planning, decentralized control, rapid movement along multiple axes, and rapid transition of BCTs from the march to the attack. The division focuses its efforts on two priorities: finding the enemy and rapidly developing the situation. On contact, the commander has five options: attack, defend, bypass, delay, or withdraw. Opportunities for hasty attack and exploitation may be numerous. For example, in Operation Iraqi Freedom I, the 3d Division conducted a movement to contact extending from Kuwait to Baghdad.

7-42. The division conducting a movement to contact organizes its BCTs, the combat aviation brigade, and supporting brigades into a forward security element and a main body. The combat aviation brigade normally screens ahead and to the flanks of the lead BCT. The lead BCT acts either as an offensive covering force or as an advance guard. The division commander reinforces it with engineer assets to conduct breach and mobility support. The advance guard BCT engages any enemy force with which it makes contact using maneuver and fires. If possible, the advance guard eliminates the opposing forces and continues to advance. If not, the advance guard BCT maneuvers to either side of the initial contact in order to fix the enemy force and develop the situation.

7-43. The main body includes the remainder of the division. The division's BCTs and units of the combat aviation brigade within the main body prepare to respond to enemy contact when the lead BCT locates significant enemy forces. When moving, the BCTs located in the main body normally provide flank security (screen or guard mission). In a very fluid environment, the trail BCT may provide a rear security

unit and maintain contact with the remainder of the corps. If the situation allows, the commander can assign a follow and support mission or a follow and assume mission to a BCT from the main body. Both groups conduct security and reconnaissance operations throughout the movement to contact.

7-44. The division commander designates a portion of the main body as a reserve. The size of the reserve depends on the mission variables and the amount of uncertainty concerning the enemy. The more uncertain the enemy situation, the larger the reserve becomes. In a division movement to contact, one BCT remains uncommitted as the division's reserve. (See ADRP 3-90.)

Attack

7-45. An attack differs from a movement to contact. In an attack, the division has useable intelligence on the disposition and strength of the enemy, which allows the commander to achieve greater synchronization. This enables the commander to mass combat power more effectively in an attack than in a movement to contact.

7-46. Division attacks are either hasty or deliberate, depending on the time available for planning and preparation. Commanders execute hasty attacks when the situation calls for immediate action with available forces and minimal preparation. They conduct deliberate attacks when they have more time to plan and prepare. Success depends on skillfully massing the effects of combat power. (ADRP 3-90 provides more detail on offensive tasks.)

7-47. The division task-organizes its BCTs and supporting brigades based upon the commander's intent and concept of operations. Normally one BCT constitutes the division's decisive operation. The commander weights the decisive operation by adding combat power to that BCT, giving it priority of support, and allocating the majority of joint support to that BCT. Depending upon the depth of the attack, the commander may use another BCT in a follow and support or follow and assume mission behind the initial main effort BCT. Each BCT receives enough combat power to accomplish its mission.

7-48. The division designates and maintains a reserve. The size and composition of the division reserve depends upon the mission variables. Typically, the division commander withholds at least one maneuver battalion, although the reserve units remain under the direct command of their parent brigades. The commander may move the reserve or direct aviation attack and lift assets to be prepared to reinforce at critical points.

Exploitation

7-49. Exploitation follows a successful attack and disorganizes the enemy in depth. Commanders of exploiting forces receive the greatest possible latitude to accomplish their missions. Exploitations may be local or major. Local exploitations take advantage of tactical opportunities. Division and higher headquarters normally conduct major exploitations using their most mobile BCTs to transform tactical success into a pursuit.

7-50. The BCTs and combat aviation brigade conducting the division's attack are also the forces that initially exploit that attack's success. The division then follows with commitment of the division reserve BCT. Division commanders request additional resources from the JFLCC, including close air support, air reconnaissance, and priority for sustainment support.

7-51. The division commander preparing to exploit should specify the acceptable degree of damage or risk to each BCT in the course of the current operation. The commander estimates the depth and time before the committed BCTs require relief. At that point, before the attacking BCT is exhausted, the commander commits the following or reserve BCT to continue to exploit.

7-52. BCTs designated to follow and assume conduct a forward passage of lines and replace the initial exploiting BCTs when they approach their culminating point. When possible, BCTs assigned these tasks should possess mobility equal to that of the exploiting BCTs or receive additional engineers and transportation assets to provide the necessary mobility. Once organized, they are committed forces and should have a priority of support from the division's multifunctional support brigades in accordance with the mission variables.

Pursuit

7-53. A pursuit catches or cuts off a hostile force attempting to escape, with the aim of destroying it. Pursuits may commence at any point when enemy forces are beginning to disintegrate or disengage. If enemy resistance has broken down entirely and enemy forces are fleeing, a force can transition to a pursuit from any type of offensive or defensive operation. Pursuits require speed and decentralized control.

7-54. The division commander uses BCTs to perform two pursuit options. Each option involves a direct-pressure force. The first is a frontal pursuit that employs only a direct-pressure force. The second is a combination that uses a BCT as direct-pressure force and an encircling force comprising one or more very mobile BCTs. The combination pursuit is generally more effective. Either the direct-pressure force or the encircling force can conduct the decisive operation in a combination pursuit.

7-55. For pursuits, the division commanders organize their brigades into security, direct-pressure, encircling, follow and support, and reserve forces. Each of these forces is normally at least of brigade size. The commander can employ available airborne and air assault brigades as part of the encircling force because of their ability to conduct vertical envelopments. The division maintains a small combined arms reserve to exploit tactical opportunities or respond to enemy counterattacks.

Forcible Entry

7-56. Forcible entry operations are special forms of attack employed by the JFC. The division conducts forcible entry operations using air assault, parachute assault, or a combination of both methods. Forcible entry differs from vertical entry in that it is an operational maneuver to seize and retain a lodgment. It is always a major joint operation and demands extremely careful planning and synchronized execution. The requirement for air or sea movement across a major geographic feature to get to the lodgment with ground forces makes it potentially one of the most hazardous missions assigned to a division. The mission to seize and retain the lodgment normally goes to either an airborne or an air assault division, based upon the primary means of assault.

7-57. Based upon the joint operation plan, the division organizes an assault echelon, typically a BCT tailored to the lift available, and an immediate reinforcing echelon consisting of the remaining BCTs of the division. The reinforcing echelon, configured for combat upon arrival, deploys by air landing in the lodgment secured by the initial assault. Elements of the supporting brigades not attached to the BCTs arrive with follow-on forces that conduct RSOI before joining the division.

7-58. The division deploys a small EECP as part of the assault echelon. The EECP accompanies the lead BCT by helicopter or aircraft. The tactical command post, tailored for available lift, follows in the reinforcing echelon. The main command post arrives with follow-on forces. (JP 3-18, FM 90-26, and ATTP 3-18.12 provide additional details on forcible entry operations.)

DEFENSIVE TASKS

7-59. The division conducts defensive tasks—mobile defense, area defense, and retrograde. A mobile defense defeats the attacking forces by permitting the enemy to advance into a position that exposes him to counterattack. Area defenses orient on retaining terrain; they draw the enemy in an interlocking series of positions and destroy the enemy largely by fires. A retrograde moves the friendly force away from the enemy to gain time, preserve forces, place the enemy in unfavorable positions, or avoid combat under undesirable conditions. Defending commanders combine the three types of defensive tasks to fit the situation.

7-60. All three types of defense use mobile and static elements. In mobile defenses, static positions help control the depth and breadth of the enemy penetration and retain ground from which to launch counterattacks. In area defenses, commanders closely integrate patrols, security forces and sensors, and reserve forces to cover gaps among defensive positions. They reinforce positions as necessary and counterattack as directed. In retrograde operations, some units conduct area or mobile defenses or security operations to protect other units that execute carefully controlled maneuver or movement rearward. They use static elements to fix, disrupt, turn, or block the attackers. They use mobile elements to counterattack and destroy the enemy.

7-61. The scheme of maneuver chosen by the division commander varies according to METT-TC. However, certain fundamentals guide the employment of forces. Regardless of the defensive task, the division commander maneuvers forces and adjusts supporting capabilities to pit the greatest friendly combat power against the enemy's main effort. The commander accepts risk and economizes in less threatened areas of operations to mass sufficient combat power and to defeat the enemy's main effort.

7-62. Tactical depth is critical. The longer the time and the greater the distance that the enemy attacking force exposes itself, then the greater the damage that joint fires can inflict before the enemy joins in close combat. Defensive depth allows the division to disrupt enemy combined arms capabilities. Depth equals time; it permits the division commander to develop the situation and understand the enemy's intent. The division commander conducts security operations (screen, guard, and cover) to add depth to the defense and develop the situation. The division shifts forces and fires to mass combat power according to the enemy's actual versus anticipated attack.

7-63. The enemy begins with the initiative. The division defends to slow and stop the enemy's attack, at which point the operational initiative is uncertain. As the attacking force culminates, it requires time and resources to consolidate and reorganize due to casualties and disorganization. A counterattack delivered at this time multiplies the effects of surprise and shock. A smaller counterattacking force can defeat a much larger and disorganized attacking force. The effect of the counterattack is often more emotional than it is physical; fear, fatigue, and uncertainty may break the enemy's coherence more completely than attrition. Through the counterattack, the division seizes the initiative and exploits any tactical advantage it creates to defeat not only the enemy's main effort, but also the entire enemy scheme of maneuver.

STABILITY TASKS

7-64. The division plans and conducts stability tasks simultaneously with offensive and defensive tasks. *Stability operations* is an overarching term encompassing various military missions, tasks, and activities conducted outside the United States in coordination with other instruments of national power to maintain or reestablish a safe and secure environment, provide essential governmental services, emergency infrastructure reconstruction, and humanitarian relief (JP 3-0). Stability operations support a host-nation or interim government or an occupation when no government exists. These operations are designed to establish a safe and secure environment; facilitate reconciliation among local or regional adversaries; establish political, legal, social (educational, health, and welfare), and economic institutions; and facilitate the transition to legitimate local governance. Stability operations involve both coercive and constructive military actions. (See ADRP 3-07.)

7-65. The tactical priority of stability tasks determines the missions allotted to subordinate units. The effort required to perform these tasks vary within the area of operations given to the BCTs and MEB (if available). The priorities of stability tasks are:

- Provide civil security.
- Establish civil control.
- Restore essential services.
- Support to governance.
- Support to economic and infrastructure development.

7-66. The first priority in stability is civil security. There is a tactical security threshold for performing any of the other stability tasks. That threshold varies tremendously in different operational environments. As a minimum, the division and its brigades protect noncombatants from large-scale hostile attacks. The division and its BCTs conduct offensive and defensive tasks against armed threats until a specified area is safe enough for the friendly force and interagency partners to address the next stability priority. If available, host-nation security forces should assume this task with division support. If large-scale combat operations are ongoing or anticipated, the division assists the local authorities with evacuation of noncombatants as authorized by the JFLCC.

7-67. Civil control is the regulation of noncombatant activity within an area of operations. When operating within a friendly host nation with a functioning civilian government, the division supports civil authority to ensure that noncombatants and Soldiers can coexist. At the opposite extreme, the division regulates a hostile population through military authority until a competent civil administration relieves them. In the

aftermath of a battle, damage to civilian infrastructure may be so great that the BCTs assume temporary responsibility for civil control. The division should attach civil affairs and additional MP units as required to allow the BCTs to provide minimal civil control in that area of operations.

7-68. With security and control established, the division assesses the state of local infrastructure to support the local population. The division either supports local authorities or provides directly the minimum-essential supplies and services to prevent further loss of life and mitigate extreme suffering. This includes food, water, temporary shelter, minimum sanitation, and critical medical support. In extreme cases, essential services may include the temporary evacuation of noncombatants to an area where the higher headquarters and local authorities can provide the essential services requirements.

7-69. Support to governance and development of the local infrastructure and economy are subsequent tasks assigned to the division based upon the overall campaign plan. Initiation of these tasks requires a secure environment, at least secure enough to permit other government agencies to operate alongside Army forces. Army forces undertake these tasks when ordered by higher headquarters, and not, as is the case with the previous three tasks, in response to the situation extant. The corps normally provides additional forces and sustainment during the latter phases of the campaign to address these requirements. Both tasks require divisional support of interagency and host-nation actions.

7-70. In stability intensive missions, the division should adjust the BCT areas of operations to conform to administrative boundaries such as provinces and districts as closely as tactical conditions permit.

DEFENSE SUPPORT OF CIVIL AUTHORITIES TASKS

7-71. When ordered by the Secretary of Defense, a Regular Army division deploys and supports domestic authorities through missions collectively labeled as DSCA. Most DSCA missions require only small numbers of Regular Army and Army Reserve Soldiers, and the division only deploys during a major catastrophe. When ordered to deploy, OPCON of the division passes to the gaining theater army, either USARPAC or USARNORTH. During a disaster, the division controls federal military forces in support of the appropriate civil authorities. The Army division works in parallel with National Guard forces under state command. The division may also deploy and support a national special security event when authorized by the President. Note that National Guard divisions may conduct DSCA under state command. (See DODD 3025.18 and ADRP 3-28 for additional details.)

7-72. If the division is the senior headquarters on an Army installation, the division may initiate DSCA under immediate response authority. Immediate response authority allows the division commander to deploy Army units in response to a disaster in the region, but only under specific circumstances. Such circumstances include a request for assistance from a civil authority, imminently serious conditions, and time constraints that do not permit approval from higher authority. In all cases, the division should consult the servicing staff judge advocate. There are critical restrictions on what federal military forces can do on U.S. soil. Division units assist civil authorities to save lives, reduce suffering, and prevent great property damage. Soldiers are not in charge; the civil authorities are. The division commander adheres to three restrictions. First, Soldiers may not undertake any law enforcement tasks. Second, Soldiers providing DSCA under immediate response authority will not carry weapons. Third, unless authorized by the Secretary of Defense, the authority for immediate response ends after 72 hours. (See DODD 3025.18 and ADRP 3-28 for additional details.)

OPERATIONAL FRAMEWORK

7-73. The division commander chooses the appropriate operational framework for the mission. The framework links purpose to time and space. For most operations, the division allots as much or more effort to stability tasks as to offensive and defensive tasks. The BCTs conduct offensive or defensive operations in their area of operations as required by circumstances in that area, the synchronization between BCTs is less important. In this tactical environment, the division describes the concept of operations through decisive, shaping, and sustaining operations.

7-74. In large-scale combat operations that require synchronized offensive and defensive tasks between the BCTs, or when the higher headquarters uses it, the division frames its concept of operations through deep, close, and security areas. This associates the purpose of division combat operations to time and space. It

aligns responsibilities for division shaping operations in areas beyond the brigade area of operations (deep). It specifies the areas within which the division commander employs BCTs in decisive action (close). This framework links area security to sustainment in an area of operations protected by BCTs in adjacent close areas (security). It also links time and distance with purpose. While the enemy's main force is too distant for close combat, the division employs joint and Army fires in the deep area to set the conditions for the BCTs. When an attacking enemy enters the close area or the BCTs maneuver into range of defending forces, the enemy is subjected to concentrated close combat supported by all available fires. Throughout, logistics and medical units remain in the security area, distant enough from major enemy forces to allow for uninterrupted sustainment, secured by the MEB or a BCT.

7-75. In either framework, the commander temporarily adjusts priorities for the situation by designating a particular unit as the main effort at that time and place. By definition, other units in the corps become supporting efforts. The division designates a main effort and weights it to conduct the decisive operation. The commander avoids parceling out the division's combat power to each BCT equally. The main effort receives the priority of support from the multifunctional support brigades and any functional brigades provided by the corps. The division task organization specifies command and support relationships to provide immediate combat power and sustainment to the main effort. Examples of actions to weight the main effort include the following:

- Temporarily attach one or two maneuver battalions to the BCT.
- Place attack aviation in direct support or under TACON to the main effort BCT.
- Narrow the area of operations to concentrate the combat power of decisive operations.
- Reinforce the main effort BCT with reinforcing and general support fires from the field artillery brigade.
- Allocate the majority of close air support and assign priority for joint fires to the decisive operation.
- Move one or more MP battalions in or near the supported BCT to process detainees and control movement of dislocated civilians.
- Position support areas forward to increase distribution of key logistics.
- Coordinate with the ESC to reinforce the BCT's brigade support battalion with direct support from a CSSB.
- Assign the main effort BCT priority of network resources, such as bandwidth and preemption level of information.
- Provide aviation assets in direct support to a BCT for lift support for troop movement and resupply of critical items.
- Attach one or more MISO units to the main effort BCT.

SHAPING OPERATIONS

7-76. The division conducts shaping operations to set and maintain tactical conditions for the success of the decisive operation. In combat, this generally involves centrally planned and decentralized completion of tasks assigned to BCTs and multifunctional support brigades in support of the BCT conducting the decisive operation. This includes stability tasks. In protracted joint stability operations, shaping operations often involve offensive and defensive tasks to establish a relatively secure environment for nonlethal activities. Shaping operations, by their nature, require economical distribution of division capabilities. Therefore, the division prioritizes them according to the length of time needed for them to be effective, and according the force required to achieve the minimum desired condition before the decisive operation. Because most joint support requires adequate lead time to provide support, the division and corps collaborate on the distribution of joint support.

7-77. Reconnaissance and surveillance precede every division operation and continue throughout the operation. The division commander establishes the commander's critical information requirements and the division staff plans reconnaissance and surveillance operations to answer these requirements. Reconnaissance and surveillance operations require movement and maneuver to develop a clearer situational understanding. This requires tactical art. The commander balances the need to develop the situation while avoiding a needlessly large engagement that detracts from the decisive operation. The

commander also emphasizes the need for subordinate unit reconnaissance and surveillance actions. As the division's operation continues and the situation becomes fluid, the level of situational understanding decreases. Without adequate reconnaissance and surveillance, the risks of missed opportunities and tactical surprise increase. Intelligence synchronization increases common, shared situational understanding.

7-78. Fires, lethal and nonlethal, remain the most timely and flexible asset available to the division for shaping in combat. The division integrates shaping fires with fires supporting the decisive operation through the targeting process. When available, the division employs an attached field artillery brigade as the force field artillery headquarters to manage all field artillery systems and synchronize fire support with maneuver.

7-79. BCTs use movement and maneuver. The BCTs and the attached combat aviation brigade shape through maneuver. The BCTs and combat aviation brigade conduct security operations (screen, guard, and cover). They also perform offensive and defensive tasks intended to set the conditions for the decisive operation. Note that the division is tasked to conduct security operations as part of the corps scheme of maneuver.

7-80. CEMA occur before, during, and after every operation. The degree of input that the division has to overall CEMA varies enormously depending on METT-TC. Some CEMA require planning and approval at levels far above the corps and JFCs.

7-81. BCTs use information-related capabilities to shape within their area of operations. In concert with corps-planned information operations, the division develops its supporting plans for activities within its area of operations. The division submits requests for support from MISO to the corps. Division-developed MISO activities normally require approval above the division level before implementation. There may also be a considerable lag time between the time that activities commence and any appreciable effect on operations.

SUSTAINING OPERATIONS

7-82. The commander may establish a support area within the division's area of operations. The support area is an effective and efficient means of concentrating and protecting logistics, personnel, and medical support. In particular, the support area allows the division to exercise TACON over sustaining units for protection and movement without interfering with the sustainment unit's ability to provide flexible and responsive area support. When the division designates a support area, it normally gives the mission of controlling it to an attached MEB.

7-83. The corps collaborates with the ESC to establish logistics and administrative priorities. The corps staff develops plans for the positioning and repositioning of sustainment units. Major elements of the ESC and MEDCOM (DS) position within the support area (or the joint support area). However, units of the ESC and MEDCOM (DS) often deploy forward into the support area. For example, a sustainment brigade may move forward to the support area. Although the sustainment brigade is in general support, it responds to the division commander owning that area of operations for positioning, security, and movement within that area of operations or support area. The division staff, MEB or BCT staff, medical staff, and sustainment headquarters coordinates the employment of sustainment assets operating within the support area. Sustainment is the key to freedom of action. Properly integrated, the area support provided by the ESC and MEDCOM (DS) units allows the divisional brigades to maneuver, concentrate their capabilities, and adjust their task organization quickly. If poorly coordinated, sustainment becomes a major contributor to loss of momentum and inadequate operational reach. The division staff gives particular attention to integrating the sustainment brigade's requirements into the concept of operations. This includes careful selection and security for forward operating bases in the division's area of operations.

7-84. Friction, chance, and uncertainty often disrupt even the most carefully planned concept of sustainment. The division commander emphasizes exercise of mission command vice detailed control of sustainment. The sustainment brigade and ESC commanders adjust their operations to conform to the division's requirements, given the commander's intent, an up-to-date common operational picture, and effective liaison between the supported division and the supporting sustainment brigade.

SUPPORT AREA

7-85. Divisions may establish a support area and assign responsibility for it to a MEB. The support area provides terrain to units supporting the division or the corps (such as medical, sustainment, engineer, aviation, and air defense), allowing the division commander to control and protect the area using the MEB. The support area also provides the division a place to position and protect its main command post in a location outside of the BCT areas of operation. The MEB commander organizes the support area into one or more bases, and assigns security responsibilities to units located within the bases. The MEB commander positions available air defense forces, MP forces, and the tactical combat force. The MEB controls movement in and through the division support area and provides security elements for convoys that require them.

7-86. The division clearly defines responsibilities for the security of units within the support area. The MEB's area of operations normally is the support area. The MEB commander designates the commanders of tenant units within the support area (less medical corps officers) as base and base cluster commanders. Those base and base cluster commanders are responsible for the local security of their respective bases and base clusters. The division may receive a regional support group to assist in control of multiple bases and base clusters within the support area. The MEB commander establishes protection priorities and defensive readiness conditions for tenant units and units transiting through the support area. The MEB staff coordinates with the division main command post to synchronize security operations in the support area with the sustainment and movement priorities established by the division.

7-87. The location and size of the support area varies according to METT-TC. It should be contiguous with the BCT areas of operations and have adequate lines of communications to each BCT. Convoys from the support area to the brigades and back should not require excessive driving time.

7-88. Divisions operating in Iraq and Afghanistan were accustomed to receiving support from large, fixed bases located centrally within the division's area of operations. In major combat operations, the situation may greatly differ. When the division maneuvers, the support area and all the bases located in it move. The division should develop plans for displacing the units within the support area in conjunction with the scheme of maneuver. The plan should include the displacement sequence, movement tables, and security responsibilities.

7-89. Displacing the support area and the units operating within always proves challenging; the presence of multiple units that provide general support complicates division-sized maneuver. The division staff, the MEB staff, the ESC, and medical brigade should carefully plan the movement plan for the support area. In offensive operations, the division locates the support area as far forward as possible consistent with security and protection considerations. The key planning consideration is operational reach. As the distance between the support area and each brigade support battalion increases, the risk of culmination increases. In defensive operations, the support area is as far behind the BCTs as feasible. The distance between the support area and the brigade support battalions of the BCTs should permit the BCTs to maneuver and defend in depth without forcing units in the support area to displace. The combat aviation brigade is a major sustainment multiplier. The division commander and staff should develop plans to employ assault and heavy lift aircraft for resupply of committed BCTs and the field artillery brigade.

7-90. In stability intensive environments, the reduced tempo of operations allows the corps, division, ESC, and MEDCOM (DS) to focus on efficient sustainment across very large areas of operations. The support area usually is centrally located between all the brigades, and the arrangement of bases facilitates throughput from the support area to the brigades and battalions with minimum transshipment. The primary consideration is protection.

ENEMY PRISONERS OF WAR

7-91. In large-scale combat operations, Army units may capture enemy combatants in large numbers. While not a major subfunction of the sustainment warfighting function, detainee operations require logistics, personnel services, and health service support. MP units relieve maneuver forces of captured and detained individuals and assume responsibility for coordinating shelter, protection, accountability, and sustainment for them. However, MP units will need extensive support if the number of captured individuals is large. This requires a wide range of support, including logistics (particularly transportation), personnel

services, and medical treatment for detainees. The presence of dislocated civilians can compound the problems of handling numerous detainees. Unless the division and corps carefully plan for the likelihood of enemy prisoners of war, dealing with detainees and dislocated civilians will overtax existing sustainment networks. Planning considerations should include:

- The possibility of capturing significant numbers of enemy personnel.
- Essential stability tasks in support of noncombatants.
- Availability of MP units for detainee operations.
- The capability of the BCTs and MEB to manage detainees and noncombatants.
- The capability of logistics units to provide support.
- The capacity of medical units to treat captured and wounded enemy personnel.
- The capability of the corps and its subordinate units to provide support.
- The combat aviation brigade's ability to shift assets to support detainee operations.

Glossary

The glossary lists acronyms and terms with Army or joint definitions. Terms for which FM 3-94 is the proponent are marked with an asterisk (*).

SECTION I – ACRONYMS AND ABBREVIATIONS

AADC	area air defense commander
AAMDC	Army air and missile defense command
AAP	Allied administrative publication
ADCON	administrative control
ADP	Army doctrine publication
ADRP	Army doctrine reference publication
AOR	area of responsibility
AR	Army regulation
ARFORGEN	Army force generation
ARSOF	Army special operations forces
ASCC	Army Service component command
ASOC	air support operations center
ASOG	air support operations group
ASOS	Army support to other Services
ATO	air tasking order
ATP	Army techniques publication
ATTP	Army tactics, techniques, and procedures
BCD	battlefield coordination detachment
BCT	brigade combat team
BFSB	battlefield surveillance brigade
BTSB	brigade special troops battalion
CBRN	chemical, biological, radiological, and nuclear
CBRNE	chemical, biological, radiological, nuclear and high-yield explosives
CCSA	combatant command support agent
CEMA	cyber electromagnetic activities
CMOC	civil-military operations center
COCOM	combatant command (command authority)
CONUS	continental United States
C-RAM	counter rocket, artillery, and mortar
CSSB	combat sustainment support battalion
DA	Department of the Army
DOD	Department of Defense
DODD	Department of Defense directive
DSCA	defense support of civil authorities
EECP	early-entry command post

EOD	explosive ordnance disposal
ESC	expeditionary sustainment command
FM	field manual
FORSCOM	United States Army Forces Command
FSCL	fire support coordination line
G-1	assistant chief of staff, personnel
G-2	assistant chief of staff, intelligence
G-3	assistant chief of staff, operations
G-4	assistant chief of staff, logistics
G-5	assistant chief of staff, plans
G-6	assistant chief of staff, signal
G-8	assistant chief of staff, financial management
G-9	assistant chief of staff, civil affairs operations
GCC	geographic combatant commander
HHB	headquarters and headquarters battalion
INSCOM	United States Army Intelligence and Security Command
ISR	intelligence, surveillance, and reconnaissance
J-1	manpower and personnel directorate of a joint staff
J-2	intelligence directorate of a joint staff
J-3	operations directorate of a joint staff
J-4	logistics directorate of a joint staff
J-5	plans directorate of a joint staff
J-6	communications system directorate of a joint staff
JAGIC	joint air ground integration center
JAOC	joint air operations center
JFACC	joint force air component commander
JFC	joint force commander
JFLCC	joint force land component commander
JP	joint publication
JSA	joint security area
JTAR	joint tactical air strike request
JTF	joint task force
MAGTF	Marine air-ground task force
MEB	maneuver enhancement brigade
MEDCOM (DS)	medical command (deployment support)
METT-TC	mission, enemy, terrain and weather, troops and support available, time available, and civil considerations
MEU	Marine expeditionary unit
MISO	military information support operations
MP	military police
NATO	North Atlantic Treaty Organization
NEAT	nuclear employment augmentation team

NETCOM	Network Enterprise Technology Command
OPCON	operational control
OPLAN	operation plan
RSOI	reception, staging, onward movement, and integration
S-1	personnel staff officer
S-2	intelligence staff officer
S-3	operations staff officer
S-4	logistics staff officer
SDDC	Surface Deployment and Distribution Command
SJFHQ-E	standing joint force headquarters for elimination
SOCCE	special operations command and control element
SOF	special operations forces
STANAG	standardization agreement
TACON	tactical control
TACP	tactical air control party
TSC	theater sustainment command
U.S.	United States
USAF	United States Air Force
USAFRICOM	United States Africa Command
USARCENT	United States Army, Central Command
USARNORTH	United States Army North
USARPAC	United States Army, Pacific Command
USASOC	United States Army Special Operations Command
USCYBERCOM	United States Cyber Command
USEUCOM	United States European Command
USNORTHCOM	United States Northern Command
USPACOM	United States Pacific Command
USSOCOM	United States Special Operations Command
USSOUTHCOM	United States Southern Command
USSTRATCOM	United States Strategic Command
USTRANSCOM	United States Transportation Command
WMD	weapons of mass destruction

SECTION II – TERMS

administrative control

Direction or exercise of authority over subordinate or other organizations in respect to administration and support. (JP 1)

area of influence

A geographical area wherein a commander is directly capable of influencing operations by maneuver or fire support systems normally under the commander's command or control. (JP 3-0)

***ARFOR**

The Army component and senior Army headquarters of all Army forces assigned or attached to a combatant command, subordinate joint force command, joint functional command, or multinational command.

Army Service component command

Command responsible for recommendations to the joint force commander on the allocation and employment of Army forces within a combatant command. (JP 3-31)

cyber electromagnetic activities

Activities leveraged to seize, retain, and exploit an advantage over adversaries and enemies in both cyberspace and the electromagnetic spectrum, while simultaneously denying and degrading adversary and enemy use of the same and protecting the mission command system. (ADRP 3-0)

operational reach

The distance and duration across which a joint force can successfully employ military capabilities. (JP 3-0)

planning horizon

A point in time commanders use to focus the organization's planning efforts to shape future events. (ADRP 5-0)

stability operations

An overarching term encompassing various military missions, tasks, and activities conducted outside the United States in coordination with other instruments of national power to maintain or reestablish a safe and secure environment, provide essential governmental services, emergency infrastructure reconstruction, and humanitarian relief. (JP 3-0)

References

All URLs were accessed on 6 March 2014.

REQUIRED PUBLICATIONS

These documents must be available to intended users of this publication.

ADRP 1-02. *Terms and Military Symbols*. 24 September 2013.

JP 1-02. *Department of Defense Dictionary of Military and Associated Terms*. 08 November 2010.

RELATED PUBLICATIONS

These documents contain relevant supplemental information.

JOINT AND DEPARTMENT OF DEFENSE PUBLICATIONS

Most joint publications are available online: <http://www.dtic.mil/doctrine/new_pubs/jointpub.htm>.

DODD 3025.18. *Defense Support of Civil Authorities (DSCA)*. 29 December 2010.

DODD 5100.01. *Functions of the Department of Defense and Its Major Components*. 21 December 2010.

DODD 5100.03. *Support of the Headquarters of Combatant and Subordinate Unified Commands*. 09 February 2011.

JP 1. *Doctrine for the Armed Forces of the United States*. 25 March 2013.

JP 3-0. *Joint Operations*. 11 August 2011.

JP 3-01. *Countering Air and Missile Threats*. 23 March 2012.

JP 3-05. *Special Operations*. 18 April 2011.

JP 3-09. *Joint Fire Support*. 30 June 2010.

JP 3-10. *Joint Security Operations in Theater*. 03 February 2010.

JP 3-16. *Multinational Operations*. 16 July 2013.

JP 3-18. *Joint Forcible Entry Operations*. 27 November 2012.

JP 3-28. *Defense Support of Civil Authorities*. 31 July 2013.

JP 3-30. *Command and Control for Joint Air Operations*. 10 February 2014.

JP 3-31. *Command and Control for Joint Land Operations*. 24 February 2014.

JP 3-33. *Joint Task Force Headquarters*. 30 July 2012.

JP 3-35. *Deployment and Redeployment Operations*. 31 January 2013.

JP 3-52. *Joint Airspace Control*. 20 May 2010.

JP 3-63. *Detainee Operations*. 30 May 2008.

JP 5-0. *Joint Operation Planning*. 11 August 2011.

JP 6-0. *Joint Communications System*. 10 June 2010.

ARMY PUBLICATIONS

Most Army doctrinal publications are available online: <http://www.apd.army.mil/>.

ADP 1. *The Army*. 17 September 2012.

ADRP 2-0. *Intelligence*. 31 August 2012.

ADRP 3-0. *Unified Land Operations*. 16 May 2012.

ADRP 3-05. *Special Operations*. 31 August 2012.

ADRP 3-07. *Stability*. 31 August 2012.

ADRP 3-28. *Defense Support of Civil Authorities*. 14 June 2013.

ADRP 3-37. *Protection*. 31 August 2012.

ADRP 3-90. *Offense and Defense*. 31 August 2012.

ADRP 4-0. *Sustainment*. 31 July 2012.

ADRP 5-0. *The Operations Process*. 17 May 2012.

ADRP 6-0. *Mission Command*. 17 May 2012.

AR 10-87. *Army Commands, Army Service Component Commands, and Direct Reporting Units*. 04 September 2007.

ATP 3-09.32. *JFIRE: Multi-Service Tactics, Techniques, and Procedures for the Joint Application of Firepower*. 30 November 2012.

ATP 3-11.36. *Multi-Service Tactics, Techniques, and Procedures for Chemical, Biological, Radiological, and Nuclear Aspects of Command and Control*. 01 November 2013.

ATP 4-32. *Explosive Ordnance Disposal (EOD) Operations*. 30 September 2013.

ATP 4-94. *Theater Sustainment Command*. 28 June 2013.

ATTP 3-09.13. *The Battlefield Coordination Detachment*. 21 July 2010.

ATTP 3-18.12. *Air Assault Operations*. 01 March 2011.

ATTP 3-34.23. *Engineer Operations–Echelons Above Brigade Combat Team*. 08 July 2010.

FM 3-01. *U.S. Army Air and Missile Defense Operations*. 25 November 2009.

FM 3-01.7. *Air Defense Artillery Brigade Operations*. 11 February 2010.

FM 3-01.94. *Army Air and Missile Defense Command Operations*. 08 April 2005.

FM 3-04.120. *Air Traffic Services Operations*. 16 February 2007.

FM 3-05. *Army Special Operations*. 09 January 2014.

FM 3-11. *Multi-Service Doctrine for Chemical, Biological, Radiological, and Nuclear Operations*. 01 July 2011

FM 3-16. *The Army in Multinational Operations*. 20 May 2010.

FM 3-22. *Army Support to Security Cooperation*. 22 January 2013.

FM 3-34. *Engineer Operations*. 04 August 2011.

FM 3-34.210. *Explosive Hazards Operations*. 27 March 2007.

FM 3-34.214. *Explosives and Demolitions*. 11 July 2007.

FM 3-35. *Army Deployment and Redeployment*. 21 April 2010.

FM 3-39. *Military Police Operations*. 26 August 2013.

FM 3-52. *Airspace Control*. 08 February 2013.

FM 3-57. *Civil Affairs Operations*. 31 October 2011.

FM 3-90.6. *Brigade Combat Team*. 14 September 2010.

FM 4-02. *Army Health System*. 26 August 2013.

FM 4-02.1. *Army Medical Logistics*. 08 December 2009.

FM 27-10. *The Law of Land Warfare*. 18 July 1956.

FM 90-26. *Airborne Operations*. 18 December 1990.

TC 3-04.7. *Army Aviation Maintenance*. 02 February 2010.

OTHER PUBLICATIONS

Most NATO publications are available online: <https://nsa.nato.int/protected/nsdd/_CommonList.html>.

AAP-06. *NATO Glossary of Terms and Definitions*. 03 April 2013.

Global Force Management Implementation Guidance. FY 2010 – 2011, approved by Secretary of Defense Memorandum OSD 77941-09, January 7, 2010.

Joint Strategic Capabilities Plan. Washington, DC: U.S. Government Printing Office, 2013.

National Military Strategy of the United States of America. Washington, DC: U.S. Government Printing Office, 2011.

STANAG 2014. *Format for Orders and Designation of Timings, Locations and Boundaries*.

STANAG 2019. *NATO Joint Military Symbology*.

STANAG 2248. *Glossary of Land Military Terms and Definitions*.

STANAG 2281. *Coalition Operations Handbook*.

Title 10, United States Code. Armed Forces.

Title 32, United States Code. National Guard.

PRESCRIBED FORMS

None.

REFERENCED FORMS

Most Army forms are available online: <www.apd.army.mil>.

DA Form 2028. *Recommended Changes to Publications and Blank Forms*.

This page intentionally left blank.

Index

Entries are by paragraph number.

A

AAMDC, 3-32–3-35
command, 5-71
commander, 3-33
support from, 5-70

ADCON, 1-51–1-52
ASCC, 1-55
chains of command, 1-86
echelons above brigade, 1-38
requirements, 4-3
responsibilities, 1-63
theater army, 2-58

administrative control. *See* ADCON

air and missile defense, 3-32–3-35
corps, 5-69–5-73
threats, 5-69
units, 4-6

air defense, capabilities, 5-73

air defense brigade, corps, 5-71

Air Force. *See* USAF

air mobility operations, corps, 5-47–5-48

air support, 5-41, 6-52
planning for, 5-45–5-46
requests, 5-46, 7-28–7-31

air support operations, division, 6-52, 7-24

air support operations center, 7-25–7-27
factors, 7-26
location of, 7-27

airlift, 5-47
direct support, 5-49
RSOI, 2-46
tactical command post and, 4-46

airspace, division, 6-49

airspace control, 5-56
corps and, 5-52–5-56
division, 7-17

airspace control authority, 6-49

airspace control policy, corps, 5-53

airspace responsibilities, corps, 5-54

alternate command post, corps, 4-39–4-45

area medical laboratory, 3-21

area of influence, definition of, 5-33

area of interest, 5-33

area of operations, assignment of, 5-34, 7-16
command post, 4-43
contiguous, 5-36
controlling, 5-38–5-39
coordination, 5-54
corps, 5-33–5-39
division, 6-49, 7-15–7-23
FSCL and, 5-50
joint force land component and, 1-93–1-95
military police and, 3-54
noncontiguous, 5-36
resizing, 7-11
responsibilities of, 5-33
sustainment, 6-33
synchronization within, 1-94
types, 5-36

area of responsibility, 1-91
landpower for, 1-13
protection, 2-7, 3-50
security cooperation in, 2-30
shaping of, 1-14

ARFOR, 1-57–1-67
ADCON, 1-63
campaign, 4-2–4-6
commander, 1-62
coordination with, 1-61
definition, 1-57
division, 6-6
ESC and, 3-6
ESC support, 2-52
force tailoring, 2-9
joint operations area, 1-65
JTF and, 1-58–1-63
major operations, 4-2–4-6
OPCON, 1-65
operational-level headquarters, 4-2
responsibilities, 1-64–1-67
support and, 1-68
support to, 3-60
tasks, 2-57
theater army, 1-66
TSC and, 1-80
versus ASCC, 1-57

Army, modular, 1-1–1-7

Army, structure of, 1-4–1-6

army air and missile defense command. *See* AAMDC

Army Corps of Engineers, theater army headquarters, 3-70

Army forces, attachment of, 1-60
combatant command of, 2-2
sustainment of, 2-47–2-55
theater level, 3-28–3-73

Army Materiel Command, theater army headquarters, 3-69

Army Service component command. *See* ASCC

Army special operations forces, 3-63, 5-59

Army support to other Services, 1-61, 2-6

ASCC, 1-53–1-56
ADCON, 1-55
combatant command and, 1-10
components of, 1-53
definition, 1-53
theater army and, 2-1–2-9
theater army as, 1-11
versus ARFOR, 1-57, 1-65

attack, corps, 5-95–5-97
division, 7-45–7-48
types, 7-46

augmentation, CEMA, 5-78
corps, 4-16–4-18
division, 6-3
joint, 4-8, 4-20
nuclear operations, 5-74
TSC, 3-10

aviation, assets, 6-20
combat brigades, 6-20–6-23, 7-79
theater brigades, 3-29–3-31

aviation combat element, Marine Corps, 5-81

B

battlefield coordination detachment, 3-59–3-60
airlift and, 5-48

battlefield surveillance brigade. *See* BFSB

BCT, 1-2
BFSB and support provided, 6-25
combat operations, 7-74
combined arms operations, 7-5
decisive action, 7-10, 7-35
division, 4-30, 5-17–5-18, 6-14–6-16, 6-4, 7-42–7-43
exploitation, 7-50–7-52

Entries are by paragraph number.

BCT (*continued*)
forcible entry, 7-57
pursuit, 7-54
reinforcement of, 6-17
reorganization of, 6-16
shaping operations, 7-79
support to, 6-25
task organization of, 7-47
types, 6-14
versus Marine expeditionary brigade, 5-80

BFSB, corps, 5-19
division, 6-24–6-27

branch plan, exploitation, 5-98

brigade combat team. *See* BCT

brigades, supporting, 4-32–4-33
under corps control, 5-19–5-21

C

campaign, ARFOR in, 4-2–4-6
corps and, 5-25, 5-104
division, 7-35
joint force land component, 4-7–4-13
protracted, 3-64
theater army and, 2-17–2-59

campaign plans, support to, 2-15

capabilities, analysis of, 5-7
Army, 5-86
joint, 5-86

CBRN, brigade, 5-21
capabilities, 6-43
division, 6-42–6-43
joint, 5-82
units, 3-40–3-46

CBRNE operational headquarters, 3-44–3-46

CEMA, coordination with, 5-77
corps, 5-76–5-78
definition of, 5-76
shaping operations, 7-80

chain of command, administrative, 1-38–1-52, 1-86–1-90
authority, 1-38
centralized medical, 1-83–1-84
echelons above brigade, 1-86
multinational operations, 1-89–1-90
operational, 1-38–1-52, 1-86–1-90
overlapping, 1-87
typical, 1-42

chemical, biological, radiological, and nuclear. *See* CBRN

chemical, biological, radiological, nuclear, and high-yield explosives. *See* CBRNE

civil affairs battalion, capabilities, 6-36
division, 6-35–6-37

civil affairs brigade, corps, 5-112

civil affairs command, support from, 3-26–3-27

civil control, division, 7-67

civil security, division, 7-66

close operations, corps, 5-128

combat aviation brigade, division, 6-20–6-23
types, 6-21

combat operations, campaigns and, 3-64
division, 7-74
large, 2-56–2-59
support to, 6-31
sustained, 2-25, 6-47
tactical land operations, 4-23

combat power, corps, 5-17
decisive operations and, 5-118
division, 7-11, 7-47
massing, 7-39
sustaining operations and, 1-69

combatant command support agent, 1-67

combatant commander, ASOS, 2-6
chain of command, 1-42
COCOM, 1-91–1-92, 2-2
JTF headquarters, 2-72
landpower, 2-1
requirements, 1-3
theater army and, 3-73

combatant commands, ARFOR, 1-57
ASCC, 1-53
assignment, 1-40
forces assigned, 1-50
headquarters, 1-8–1-37
requirements, 2-16
support to, 1-67
types, 1-10

command, authority of, 1-41
supporting, 4-31
theater level, 3-1–3-73

command and support relationships, 1-68, 4-4
corps, 5-18
division, 7-10

command post. *See* also specific command post
planning for, 4-50–4-51

command relationships, affects on, 1-68
joint, 1-41

commanders, adjustments by, 7-75
ARFOR, 1-62
authority of, 1-41
considerations, 5-58
priorities, 7-75
responsibilities, 5-18, 5-52, 5-86, 7-9
shaping conditions, 5-93
theater army, 1-63

communications, 3-13
integrated, 3-11
space-based, 5-68
support, 4-57
theater, 2-37

concept of support, logistics, 1-68
medical, 1-82–1-85
theater, 1-72

conduct of operations, decentralize, 5-85

contiguous area of operations, corps, 5-36
division, 7-20

contingency command post, HHB, 2-74
JTF headquarters, 2-72–2-73
organization of, 2-70–2-71
theater army, 2-70–2-71

control measures, 7-19

corps, 1-16–1-18
ADCON requirements, 4-3
air support planning, 5-45
area of operations, 5-33–5-39
brigades under, 5-19–5-21
capabilities of, 1-16
close operations, 5-128
configuration, 4-27
deep operations, 5-127
defensive tasks, 5-104–5-108
deployment of, 5-9–5-13
DSCA, 5-113–5-115
effects on task organization, 5-20
force tailoring, 4-28
forcible entry operations, 5-132–5-137
joint force land component and, 4-7–4-13
joint forces and, 5-40–5-82
JTF headquarters, 4-15–4-22, 5-135
land component tasks, 4-10
main effort, 5-131
offensive tasks, 5-93–5-103
operational framework, 5-116–5-131
organization of, 4-1–4-57, 5-17, 5-105
reserve, 5-108

Entries are by paragraph number.

corps (*continued*)
responsibilities, 5-40, 5-55
roles of, 1-17, 4-1–4-26, 5-91
RSOI and, 5-16
security operations, 5-130
stability tasks, 5-109–5-112
subordinate forces, 4-27–4-33
subordination, 5-29
support to, 5-122
supporting effort, 5-131
tactical echelon, 5-125
tactical headquarters, 5-91
task organization of, 5-14–5-39
tasks of, 1-18

corps commander, considerations, 5-13, 5-100
determinations by, 5-18–5-22
EECP, 4-48
joint capabilities, 5-2
joint force land component, 4-12
mobile command group, 4-49
responsibilities, 5-5, 5-10
support to, 5-33

corps headquarters, 4-34–4-57
airspace control policy, 5-53
ARFOR and, 1-64
as joint force land component, 1-49
augmentation, 4-16–4-18
operational level, 5-42, 5-120
parts of, 4-34
tactical level, 5-43, 5-126
versatility of, 5-1

corps operations, 5-1–5-137
support to, 5-32

corps reserve, 5-22–5-24

corps staff, coordination by, 5-123

criminal investigation command, 3-55

crisis response, JTF headquarters, 4-16–4-18

cyber electromagnetic activities. *See* CEMA

cyberspace operations, 2-37–2-38

D

decisive action, corps, 5-83–5-115
division, 7-35–7-72
operational level, 5-84–5-90
organization for, 7-10
tactical headquarters, 6-1
tactical level, 5-91–5-115

decisive operations, corps, 5-118
division, 7-47, 7-76

decisive, shaping, and sustaining framework, corps, 5-117–5-125
division, 7-74–7-81

deep operations, corps, 5-127

deep, close, and security operational framework, corps, 5-126–5-130

defense, shaping, 5-107

defense support of civil authorities. *See* DSCA

defensive tasks, corps, 5-104–5-108
division, 7-59–7-63, 7-74

dependencies, theater army, 3-65–3-72

deployment, corps, 5-9–5-13
division, 7-7–7-8
division headquarters, 7-1
EECP and, 4-48
force tailoring, 2-43
tactical command post and, 4-38
tempo, 5-10
theater engineer command, 3-37

depth, 7-62
corps, 5-119
division defense, 7-60–7-62

design, manning and, 1-22–1-37
philosophy of, 1-22
warfighting functions and, 1-23

detainee operations, 3-51, 7-91

deter, joint phase, 2-20–2-21

deterrence, theater army, 2-29–2-32

distribution management center, 1-78

division, area of operations, 7-15–7-23
Army, 1-19–1-21
BCTs in, 6-4, 6-14–6-16
command and support relationships, 7-10
corps and, 4-30
corps organization, 5-17–5-18
deployment, 7-7–7-8
joint force land component, 6-5–6-6
limitations, 6-10–6-12
multifunctional support brigade, 6-17–6-33
multinational headquarters, 6-7–6-8
offensive tasks, 7-36–7-58
organization of, 1-1, 6-1–6-67, 7-42, 7-55, 7-57
other forces, 6-34–46
reserve, 7-44
roles of, 1-20, 6-1–6-12
subordinate forces, 6-13–6-46
support to, 5-102, 7-23, 7-88
task organization of, 7-9–7-14, 7-47
tasks, 1-21
transformation of, 1-8
USAF and, 7-24–7-32

division commander, considerations, 7-25
control measures, 7-19
decisive operations, 5-118
mobile command group, 6-62
relationships, 7-10
requirements from, 6-24
responsibilities, 7-4–7-6, 7-37–7-39
tactical command post and, 6-55

division headquarters, ARFOR and, 1-64
deployment, 7-1
joint force land component, 6-3
JTF headquarters, 6-9
organization of, 6-47–6-67

division operations, 7-1–7-91
CBRN and, 6-43
main command post, 6-48

dominate, joint phase, 2-24

DSCA, circumstances of, 5-114–5-115
corps, 5-113–5-115
division, 7-71–7-72
responsibilities for, 2-60
theater army, 2-60–2-62

E

early-entry command post. *See* EECP

echelons above brigade, 1-1–1-95
chain of command, 1-38, 1-52, 1-86
control, 1-38
headquarters, 1-34, 5-1
integrating cells, 1-31

EECP, corps, 4-47–4-48
division, 6-59–6-60
organization, 6-59

enable civil authority, joint phase, 2-26–2-27

enemy prisoners of war, division, 7-91
pursuit and, 5-103

ESC, 3-8, 5-122
corps, 7-83
distribution management center, 1-78
limitations, 4-25
positioning of, 5-106
relationships of, 3-6

Entries are by paragraph number.

ESC (continued)
support from, 2-50, 2-52, 7-23
theater army, 3-4–3-6

expeditionary sustainment command. *See* ESC

exploitation, corps, 5-98–5-100
division, 7-49–7-52
risks, 7-51

explosive ordnance disposal, division, 6-39–6-41

explosive ordnance disposal group, 3-47

F

field army, control of, 2-58
tasks of, 2-57

field artillery brigade, division, 6-19

fire support coordination line. *See* FSCL

fires, shaping with, 7-78

force packages, 1-2
corps, 4-32
development of, 2-41–2-42
tailoring requirements, 5-15

force projection, corps, 5-10
processes of, 5-11

force tailoring, Army forces, 2-39–2-45
corps, 4-28, 5-13
deployment, 2-43
force packages, 5-15
MISO, 3-61
requirements, 2-39

forces, assignment of, 1-40
Service retained, 2-40
sustainment to, 1-72

forcible entry, 5-132
capabilities, 5-133
corps, 5-132–5-137
division, 7-56–7-58

forward passage of lines, exploitation, 7-52

framework, decisive, shaping, and sustaining, 5-117–5-125, 7-74–7-81
f, deep, close, and security, 5-126–5-130

FSCL, corps, 5-50–5-51

functional cells, 1-23, 1-27, 1-29–1-30

G

garrison command, theater army headquarters, 3-67

geographic combatant command, 1-10, 2-60, 2-73
ASCC, 1-11
augmentation to, 3-43
civil affairs, 3-26
deployment of, 2-43
landpower, 2-14
support to, 1-9
unified action in, 2-10–2-16

geographic combatant commander. *See* GCC

global force management, 1-3, 1-40, 2-40

governance, support to, 7-69

H

headquarters, design of, 1-23
division as, 1-8
echelons above brigade, 1-34
multinational, 1-36
staff, 1-35
structure of, 1-25
table of organization and equipment, 1-37

headquarters and headquarters battalion. *See* HHB

headquarters support company, 2-75

health service support, 2-55

HHB, corps, 4-52–4-57
division, 6-66–6-67
organization of, 6-67
support from, 6-66
theater army, 2-74–2-76

higher headquarters, corps, 5-105, 6-8
organization of, 1-26–1-27

I

information collection, BFSB, 6-24
integration, 5-62
joint, 5-62–5-66
requirements, 5-66

information operations support, 3-57–3-58

infrastructure, assessment of, 2-34, 7-68
deterioration of, 5-115
development of, 7-69

initiative, enemy, 7-63

integrating cells, 1-28, 1-31
main command post, 6-51
movement and maneuver cell and, 1-24
transition across, 2-68

integration, horizontal, 1-28
vertical, 1-27

J

JFC, 1-64
chain of command, 1-86
corps, 5-33
support relationship and, 1-48

joint air assets, division and, 7-29

joint air planning, products of, 5-64

joint capabilities, arrangement of, 5-40
CEMA and, 5-78
JFC, 2-22
with decisive action, 5-2

joint CBRN, corps, 5-82

joint collection working group, 5-65

joint force commander. *See* JFC

joint force land component, ARFOR and, 4-31, 6-6
as corps headquarters, 1-49
conditions, 5-87
corps and, 4-7–4-13, 5-26, 5-117
division, 6-5–6-6
division headquarters, 6-3
integration of, 4-12
operational environment, 5-84
requirements, 5-49
role, 5-88
SOF and, 5-61

joint force land component command, 6-5–6-6

joint forces, corps and, 5-40–5-82
organizing, 4-11
sustainment of, 2-47–2-55

joint information collection, corps, 5-62–5-66

joint intelligence, corps, 5-62–5-66

joint intelligence, surveillance, and reconnaissance, 5-63

joint operations area, 1-94–1-95
ARFOR, 1-65
joint security area, 2-9
OPCON, 1-65
set the theater and, 2-33–2-38
threats to, 3-35

joint phasing model, theater army and, 2-18–2-27

joint security area, 4-13
establishment of, 2-9

joint security operations, 4-13

joint task force. *See* JTF

joint theater enablers, 3-72

Entries are by paragraph number.

JTF, ARFOR and, 1-58–1-63, 1-64
attachment to, 1-60
directives of, 4-5
functional components, 1-59
Service components, 1-59
use of, 1-43

JTF headquarters, augmentation, 4-20
contingency command post, 2-72
corps and, 4-15–4-22, 5-135
division headquarters, 6-9
limitations, 4-24–4-26
organization, 4-19
theater army, 2-72–2-73
training, 4-21–4-22

JTF staff, forming, 4-16–4-18

L

land forces, capabilities, 5-27
corps, 4-7

land operations, complexity of, 1-32
conduct of, 2-56
joint force land component, 4-7

landpower, combatant commander, 2-1
employment of, 2-33, 5-25
geographic combatant command, 2-14
integration of, 1-13, 4-1
sustainment of, 1-70
theater army, 2-10

limited contingency operations, 6-3
chain of command, 1-87
division, 1-20
JTF headquarters, 4-15–4-18

logistics, ASOS, 2-6
execution of, 1-73
responsibilities, 1-74
staff, 1-75

logistics command, centralized, 1-73–1-74

logistics operations, 1-69

logistics support, division, 6-31
medical support and, 1-68–1-95
personnel support and, 2-50–2-54
stability and, 5-111

logistics units, command of, 2-51

M

main command post, ASOC and, 7-27
corps, 4-26, 4-35–4-37
deployment of, 7-9
division, 6-11, 6-48–6-53
location, 4-36
organization, 6-50
responsibilities, 2-64–2-67
staff, 6-48
support to, 4-51
tactical command post and, 6-54
theater army, 2-64–2-69
versus contingency command post, 2-71

main effort, corps, 5-131
priorities for, 7-75

major operation, ARFOR in, 4-2–4-6
campaigns and, 4-7–4-13
corps, 5-93
joint, 3-4
tailored, 4-28

maneuver enhancement brigade. *See* MEB

manning, design and, 1-22–1-37

Marine Corps, corps and, 5-79–5-81
division and, 7-33–7-34

Marine Corps aviation combat element, corps, 5-81

Marine expeditionary brigade, corps, 5-79–5-80

Marine expeditionary unit, division, 7-33 – 7-34

materiel, cross-leveling, 1-76

MEB, division and, 6-28–6-29, 7-18
support area, 7-85–7-86

MEDCOM (DS), 1-84, 3-18–3-21

medical, chain of command, 1-83–1-84
concept of support, 1-82–1-85

medical battalion (multifunctional), 3-20

medical brigade, limitations, 4-25

medical brigade (support), 3-19

medical command (deployment support). *See* MEDCOM (DS)

medical logistics management center, 3-9

medical support, logistics support and, 1-68–1-95
provision of, 1-85
stability and, 5-111

military engagement, support to, 3-2
theater army, 2-29–2-32

military history detachment, division, 6-45

military information support operations, 3-61–3-62

military operations, range of, 1-7

military police, brigade, 3-53–3-54
command, 3-56
support, 3-49–3-56

mission command warfighting function, 1-30

mobile command group, components of, 6-63
corps, 4-49
division, 6-61–6-65
purpose, 6-61

mobile public affairs detachment, division, 6-46

movement, sustainment brigade, 6-32

movement and maneuver cell, integrating cells and, 1-24

movement to contact, characteristics, 7-41
corps, 5-94
division, 7-40–7-44
versus attack, 7-45

multifunctional support brigades, 4-33
division, 6-17–6-33
types, 6-17

multinational forces, abilities, 5-28
combat operations and, 2-56
corps, 4-29, 5-25–5-28
responsibilities, 5-90

multinational headquarters, division, 6-7–6-8

multinational land component headquarters, corps and, 4-14

multinational operations, chain of command, 1-89–1-90

multinational unit, area of operations for, 5-35

N

network command, 3-12

noncontiguous area of operations, division, 7-21–7-23

nuclear operations, corps, 5-74–5-75

O

objectives, operational, 7-4

offensive tasks, corps, 5-93–5-103
division, 7-36–7-58

Entries are by paragraph number.

OPCON, ARFOR and, 1-59, 1-65
ASCC, 1-56
BFSB, 6-26
combatant commander, 1-60
corps headquarters, 1-49
joint operations area, 1-65
JTF and, 2-48
support and, 5-29–5-32

operational areas, 1-91–1-95

operational art, corps, 5-5–5-7

operational campaign plan, versus theater campaign plan, 2-31

operational control. *See* OPCON

operational environment, 2-62
analysis of, 5-8
characteristics, 5-84
joint force land component, 5-84

operational framework, corps, 5-116–5-131
division, 7-73–7-91

operational reach, 5-7
definition of, 5-6
extension of, 5-121
FSCL, 5-50
shaping, 5-119

operational requirements, meeting, 1-76

operations, corps level, 5-1–5-13

organization, 4-19
division, 1-1, 5-17–5-18
force tailoring and, 2-45
joint forces, 4-11
theater army, 1-11

other Service forces, corps, 5-25–5-28
limitations of, 5-27

P

personnel, allocation of, 1-29
augmentation to, 4-17
movement of, 2-46
provision of, 3-51

personnel support, logistics support and, 2-50–2-54

phases, joint, 2-18–2-27
shaping for, 5-87

planning, air support, 5-45–5-46
civil affairs and, 6-37
command post employment, 4-50–4-51
exploitation, 5-100
joint air, 5-64
main command post, 2-64, 2-66
SOF and, 5-58

planning horizon, 1-24
corps, 5-5
defined, 1-31
division, 7-4

plans, support, 1-72

protection, enablers of, 2-8
main command post, 4-37
responsibility for, 2-7–2-9

protective services detachment, theater army headquarters, 3-71

provost marshal, 3-50–3-52

pursuit, consideration, 5-103
corps, 5-101–5-103
division, 7-53–7-55
options, 7-54

R

reception, staging, onward movement, and integration. *See* RSOI

regional support group, 3-48

regionally aligned forces, 2-15–2-16

relationship, command, 7-33
command and support, 1-68, 4-4, 5-18, 7-10
joint command, 1-41
support, 1-44, 1-47–1-48, 3-6, 5-30

requirements, forecast of, 1-3

reserve, composition of, 5-23
corps, 5-22–5-24, 5-108
division, 7-44, 7-48

responsibilities, ARFOR, 1-64–1-67
ASCC, 1-53
commander, 3-34
corps, 5-54–5-55
ESC, 1-74
military departments, 2-4
redirected, 1-54
Services, 2-4
staff, 6-48
theater army, 1-56
TSC, 1-74

RSOI, attachment and, 5-16
corps, 5-16
theater army and, 2-46, 5-12

S

scheme of maneuver, 7-61

security, MEB, 6-28
mobile command group, 6-64
support area, 7-86

security cooperation, requirements, 5-89
sustaining, 2-32
theater army, 2-29–2-32
theater campaign plan and, 2-30

security operations, corps, 5-129

seize the initiative, joint phase, 2-22–2-23

Service retained forces, 2-40

Services, responsibilities, 2-3-2-4

set the theater, actions, 2-33
joint operations area and, 2-33–2-38

shape, defense, 5-107
joint phase, 2-19

shaping, AOR, 1-14
GCC, 2-29

shaping operations, 4-42
corps, 5-119–5-120
division, 7-76–7-81

signal command (theater), 3-13–3-15

signal support, theater level, 3-11–3-17

situational awareness, development of, 5-37

situational understanding, 7-40, 7-77

SOF, 3-63
coordination, 5-60
corps, 5-57–5-61
division, 6-44
role, 5-88

space support, corps, 5-67–5-68

span of control, 7-12

special operations forces. *See* ARSOF and SOF

stability operations, definition of, 7-64
ESC support, 2-53

stability requirements, determining, 5-112

stability tasks, assessment of, 7-6
corps, 5-109–5-112
determination of, 5-110
division, 7-64–7-70
priorities of, 7-65

stabilize, joint phase, 2-25

staff, division, 7-89
flexible organization of, 1-32–1-37
headquarters, 1-35
JTF, 4-16–4-18
logistics, 1-75, 1-77
organization, 1-32–1-37
responsibilities, 6-48
tactical command post, 6-55

Entries are by paragraph number.

standing joint force headquarters for elimination, 3-41–3-43

structure, Army, 1-4–1-6

support, categories of, 1-45–1-46
  command authority and, 1-44
  displacing, 5-125
  joint, 1-47
  OPCON and, 5-29–5-32
  staff, 1-77

support area, corps, 5-124
  displacement of, 7-89
  division, 7-85–7-90
  location, 7-87

support relationship, affects on, 1-68
  corps, 5-30
  TSC, 1-79

supporting effort, corps, 5-131

sustain, Army forces, 2-47–2-55
  joint forces, 2-47–2-55

sustaining operations, centralized, 2-54
  corps, 5-121–5-125
  division, 7-81–7-84
  purpose, 1-69

sustainment, disruptions to, 7-84

sustainment assets, positioning of, 5-106

sustainment brigade, attachment of, 3-8
  division, 6-30–6-33
  movement coordination, 6-32
  support from, 6-31, 7-23
  theater army, 3-7–3-8

sustainment units, OPCON of, 1-80
  specialized, 3-10
  TACON of, 1-80

synchronization, area or operations, 1-94
  joint capabilities, 5-2
  operational framework and, 7-74

T

table of organization and equipment, headquarters, 1-37

tactical command post, alternate command post, 4-39–4-45
  capabilities, 6-56
  corps, 4-38–4-46
  displacing, 4-46
  division, 6-11, 6-54–6-58
  duties, 6-57
  roles of, 6-58

tactical echelon, combat operations and, 4-23

tactical environment, division, 7-1–7-6

tactical headquarters, corps, 5-91, 5-131

tactical military information support company, division, 6-38

task organization, 2-45
  division, 7-13, 7-47

task-organizing, corps, 4-32, 5-14–5-32
  division, 6-15, 7-9–7-14
  sustainment brigades, 3-7

technology, leveraging, 7-37

tempo, stability and, 7-90

terrain, sustainment brigade, 6-33

theater, expanded, 3-64

theater army, 2-1–2-76
  actions, 2-28–2-46
  ARFOR, 1-66
  ASCC and, 2-1–2-9
  ASCC roles, 1-11
  ASCC tasks, 1-12
  campaign and, 2-17–2-59
  commander, 1-63
  DSCA, 2-60–2-62
  joint phasing model, 2-18–2-27
  limitations, 2-13
  plans-to-operations transition, 2-68
  reinforcements for, 3-28
  requirements of, 1-15, 2-14, 2-48
  responsibilities, 1-56, 2-34
  role of, 2-2
  support from, 2-36, 3-2
  tasks, 2-11–2-12

theater army commander, 1-13, 1-63, 2-21, 3-6
  protection from, 2-7
  responsibilities, 2-3

theater army headquarters, 2-63–2-76
  capabilities of, 2-10
  dependencies on, 3-65–3-72
  flexibility of, 2-56

theater aviation, 3-29–3-31

theater campaign, 2-32

theater campaign plan, operational campaign plan versus, 2-31
  security cooperation and, 2-30

theater engineer command, 3-36–3-39
  support from, 3-36

theater forces, 3-1–3-27

theater military intelligence brigade, 3-22–3-25
  theater army headquarters, 3-68

theater signal command, theater army headquarters, 3-66

theater strategic signal brigade, 3-16

theater sustainment command. *See* TSC

theater tactical signal brigade, 3-17

Title 10, 1-55, 2-7
  functions, 2-47

training, JTF headquarters, 4-21–4-22
  support to, 4-20
  sustainment and, 2-47

transformation, Army, 1-8–1-9

transition, anticipation of, 5-99
  BCT, 7-41
  plans-to-operations, 2-68

TSC, 6-30
  assigned, 3-3
  augmentation from, 3-10
  distribution management center, 1-78
  responsibility of, 5-12
  role, 1-71
  support, 2-50
  support relationship, 1-79
  sustainment brigade and, 6-30
  theater army, 3-3–3-10

U

units, theater level, 3-1–3-73

unity of command, 1-83

USAF, corps and, 5-41–5-56
  division, 7-24–7-32
  support from, 5-41, 6-52, 7-24–7-32

W

warfighting functions, design and, 1-23

weather assets, 7-32

This page intentionally left blank.

FM 3-94
21 April 2014

By order of the Secretary of the Army:

RAYMOND T. ODIERNO
General, United States Army
Chief of Staff

Official:

GERALD B. O'KEEFE
Administrative Assistant to the
Secretary of the Army
1408701

DISTRIBUTION:

Active Army, Army National Guard, and U.S. Army Reserve: To be distributed in accordance with the initial distribution number (IDN) 116054 requirements for FM 3-94.

PIN: 104123-000